EZ Connectors

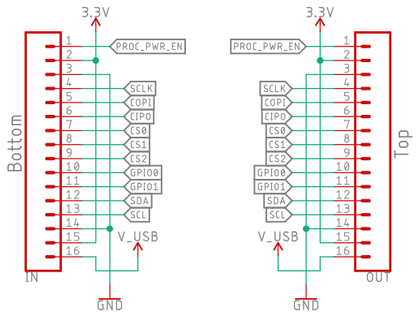

Disable Processor Board Regulator

Boost Converter

Caution
=====
Ensure the battery polarity is correct
There is no reverse-polarity protection on this board

Recommended VIN (Min) : 1.5V (1 x AAA)
Recommended VIN (Max): 3.0V (2 x AAA)
Maximum VIN: 5.5V

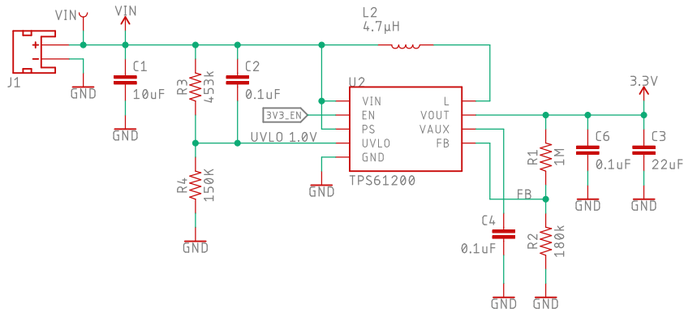

ATtiny43

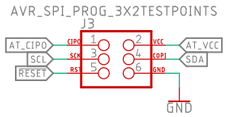

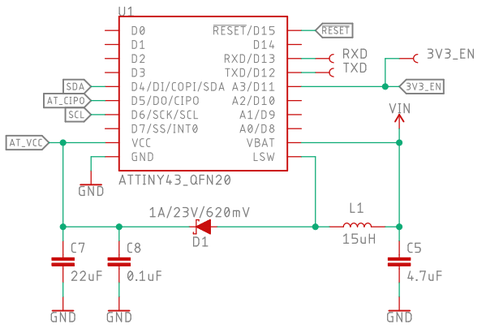

ATtiny43
======
Pin 4 is COPI and Pin 5 is CIPO when the chip is in peripheral mode or is being programmed
Pin 4 is CIPO and Pin 5 is COPI when the chip is operating in controller mode
The #defines in the ATTinyCore assume controller mode

open hardware

SPARK X

Released under the Creative Commons
Attribution Share-Alike 4.0 License
https://creativecommons.org/licenses/by-sa/4.0/

Special Instructions

TITLE:	SparkX_smol_Power_AAA
Design by:	Paul Clark
REV:	X02
Date:	not saved!
Sheet:	1/1