EZ Connectors

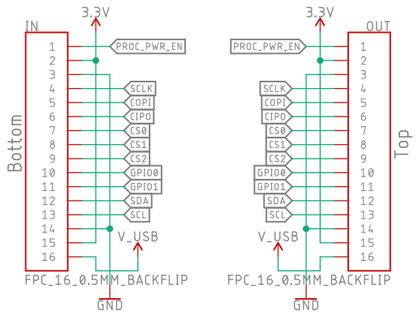

Disable Processor Board Regulator

LiPo Charger

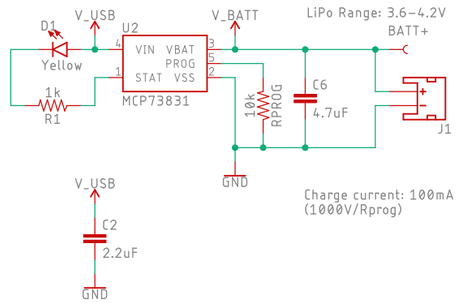

EZ Voltage Regulation

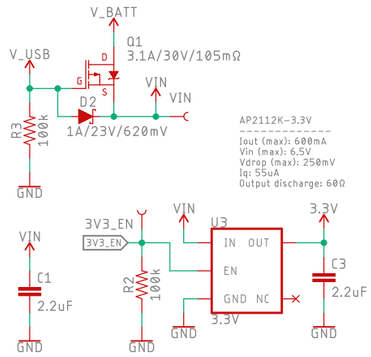

Fuel Gauge

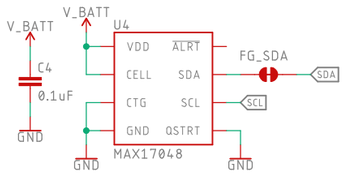

I2C Address = 0x36

ATtiny43

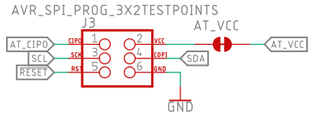

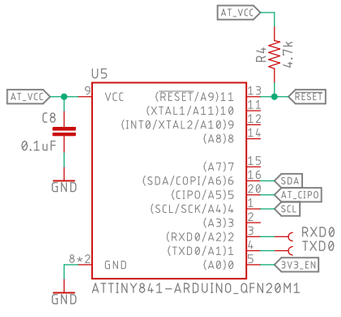

ATtiny Voltage Regulation

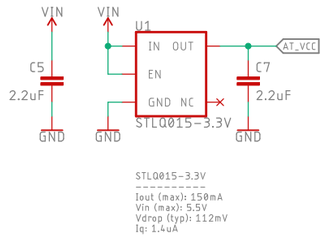

open hardware

SPARK X

Special Instructions

Released under the Creative Commons
Attribution Share-Alike 4.0 License
https://creativecommons.org/licenses/by-sa/4.0/

TITLE: SparkX_EZ_LiPo_Power

Design by: Paul Clark

REV: X01

Date: 25/05/2021 11:40

Sheet: 1/1