3HS Series

PRODUCT DATA SHEET

Metal Heater

Durable, efficient chemical heater

For use in most aqueous alkaline solutions and rinse tanks

Low watt density design saves space & ensures long life

Vapor resistant, flame retardant polypropylene terminal enclosure

Grounded construction and built in thermal protector

Up to 82°C (180°F)

3,000 watts to 10,500 watts.

200 to 600 Volts
600V on 4,500W or lower only

Steel, 304 stainless steel, 316 stainless steel, and titanium

cULus (except steel and 600 volts)

3HS SERIES, THREE ELEMENT STAINLESS STEEL HEATERS

WATTS	VOLTS	HOT ZONE In./(mm)	OVERALL LENGTH In./(mm)	MODEL NUMBER	SHIP WGT. Lbs./(kg)
3000	240	11	17	3HS3217-**	9
	480	(279)	(432)	3HS3417-**	(4.1)
4500	240	17	23	3HS4.5223-**	10
	480	(432)	(584)	3HS4.5423-**	(4.5)
7500	240	21	29	3HS7.5229-**	12
	480	(533)	(737)	3HS7.5429-**	(5.4)
10500	240	26	34	3HS10.5234-**	14
	480	(660)	(864)	3HS10.5434-**	(6.4)

***Three phase standard, single phase available as option. Add "-1" before thermal protector designator.**

PROCESS TECHNOLOGY

ISO 9001:2015 WITH DESIGN CERTIFIED

Features & Values

- For use in most aqueous alkaline solutions and rinse tanks. Check solution recommendation chart with your chemical supplier for proper sheath material selection
- Heavy wall metal sheaths available in: steel, 304 stainless steel, 316 stainless steel and titanium
- Watt densities up to 40 watts per square inch (6.2 w/cm²) ensure long service life
- Vapor-resistant, flame retardant polypropylene termimal enclosure with 3 ft (.9m) flexible PVC liquid tight conduit.
- Temperature and level controls sized to match the heater
- Lower watt densities for highly viscous solutions

Specifications

Wattages	3,000 to 10,500 Watts
Voltages	200 to 600 Volts (600V on 4,500W or lower only)
Temperature Range	Up to 180°C (82°F)
Options	▫ Special configurations & lengths ▫ Longer wire and conduit lengths ▫ All metal welded junction box
Safety Features	▫ Grounded construction ▫ Thermal protector built in. Replaceable PI protector standard for solutions up to 180°F (82°C). ▫ See chart below for protector options
Certifications	cULus compliant (except 600V)

Dimensions

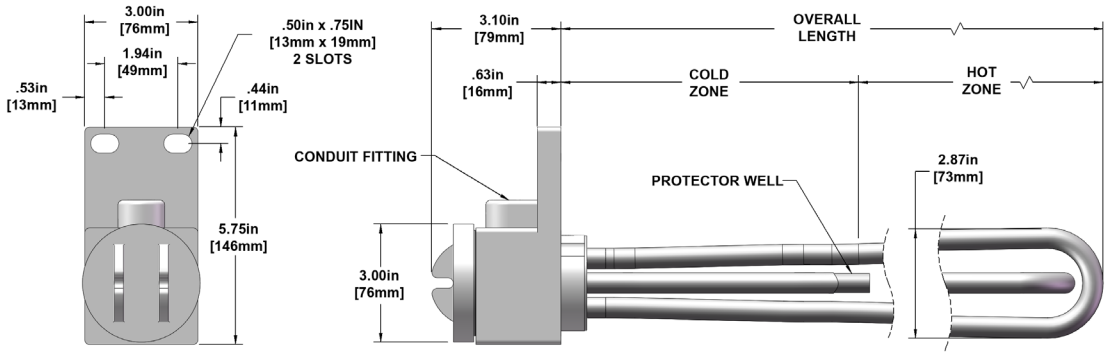

Model Number Breakdown

3HS	3	3	23	-	P4	-

Series	Wattage	Voltage	Overall Length (In.)	Phase
3HS = 3 element, 316 stainless steel	3 = 3000	1 = 120	17 = 3kW	no designator = three phase(std)
	4.5 = 4500	2 = 240	23 = 4.5kW	-1 = single phase
	7.5 = 7500	3 = 380	29 = 7.5kW	M = Metal welded junction box (resettable protector required)
	10.5 = 10500	4 = 480	34 = 10.5kW	
		5 = 415		
		6 = 600		
		7 = 400		
		8 = 208		
		9 = 220		
		0 = 200		

Type of Protector
Replaceable Fuse
P1 (std) = solutions up to 180°F
P4 = solutions up to 230°F
P5 = solutions up to 300°F
Resettable Fuse
P2 = solutions up to 180°F
P6 = solutions up to 230°F
P7 = solutions up to 300°F

Wire & Conduit Length
36" length standard (no designator)
Specify variations from standard Ex: -X84 = 84"

PROCESS TECHNOLOGY