CKT 1

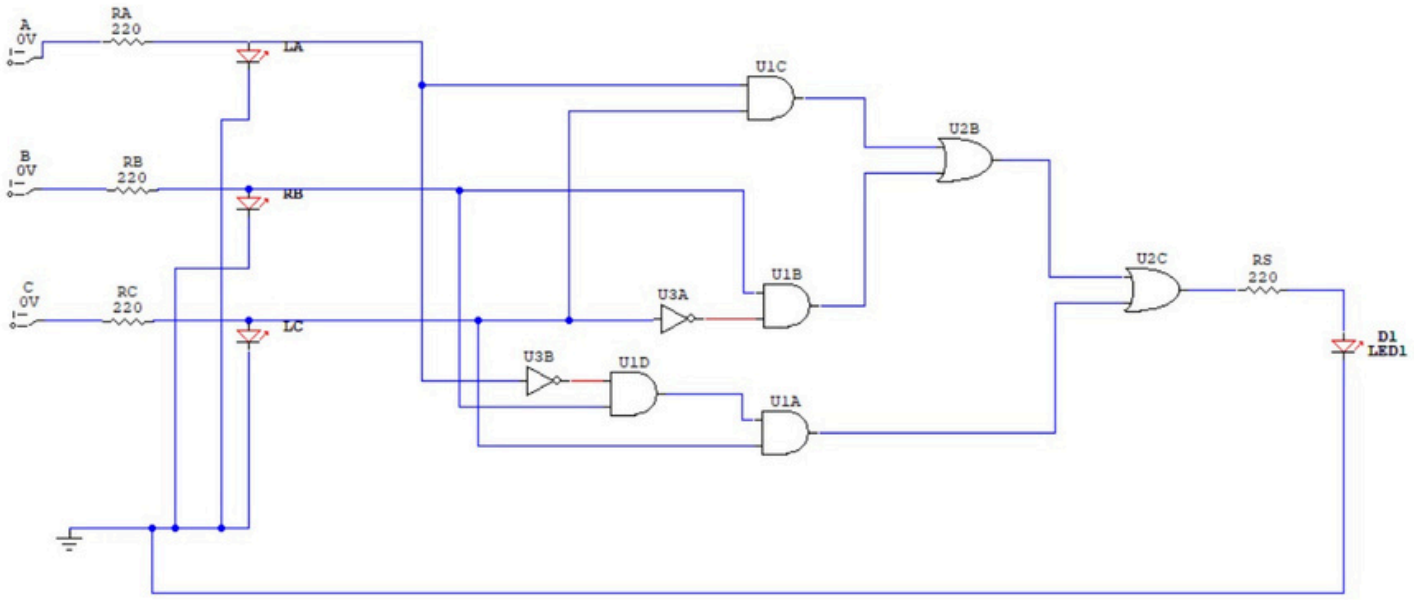

A	B	C	D	E	S
0	0	0	0	0	0
0	0	0	0	1	1
0	0	0	1	0	0
0	0	0	1	1	1
0	0	1	0	0	0
0	0	1	0	1	1
0	0	1	1	0	0
0	0	1	1	1	1
0	1	0	0	0	0
0	1	0	0	1	1
0	1	0	1	0	0
0	1	0	1	1	1
0	1	1	0	0	0
0	1	1	0	1	0
0	1	1	1	0	0
0	1	1	1	1	1
1	0	0	0	0	0
1	0	0	0	1	1
1	0	0	1	0	0
1	0	0	1	1	1
1	0	1	0	0	0
1	0	1	0	1	0
1	0	1	1	0	0
1	0	1	1	1	1
1	1	0	0	0	0
1	1	0	0	1	1
1	1	0	1	0	0
1	1	0	1	1	1
1	1	1	0	0	0
1	1	1	0	1	0
1	1	1	1	0	0
1	1	1	1	1	1

CKT 2

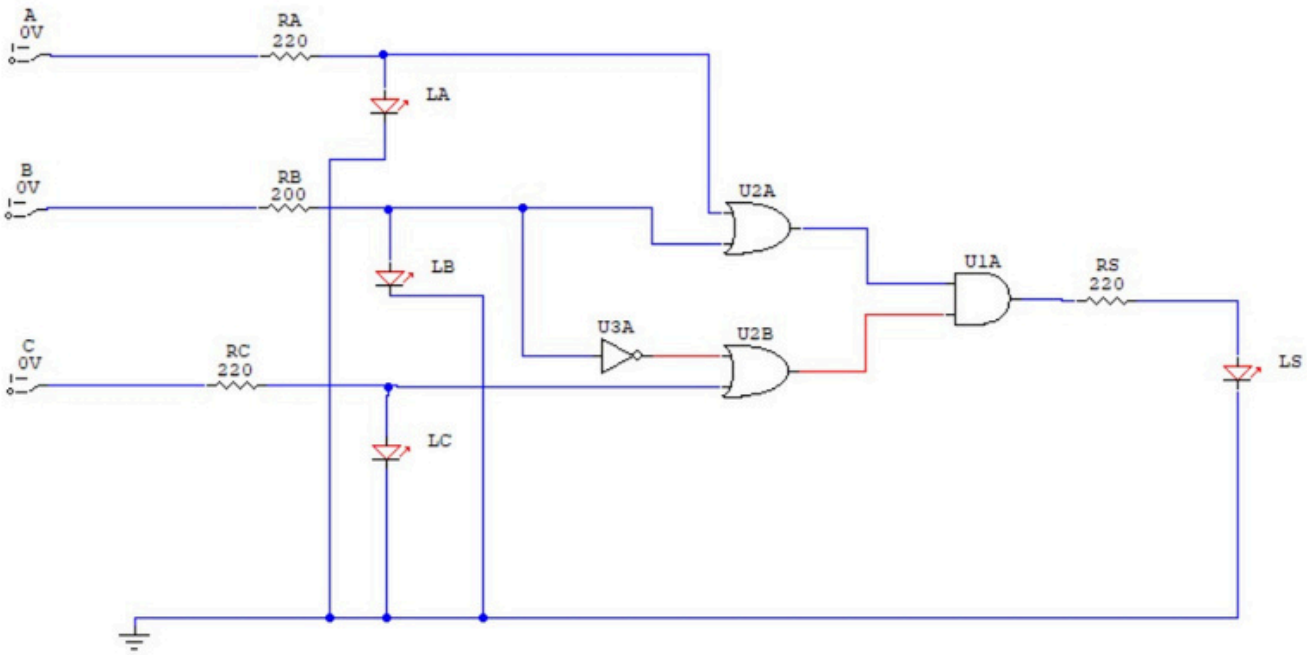

A	B	C	S
0	0	0	0
0	0	1	0
0	1	0	1
0	1	1	1
1	0	0	0
1	0	1	1
1	1	0	1
1	1	1	1

CKT 3

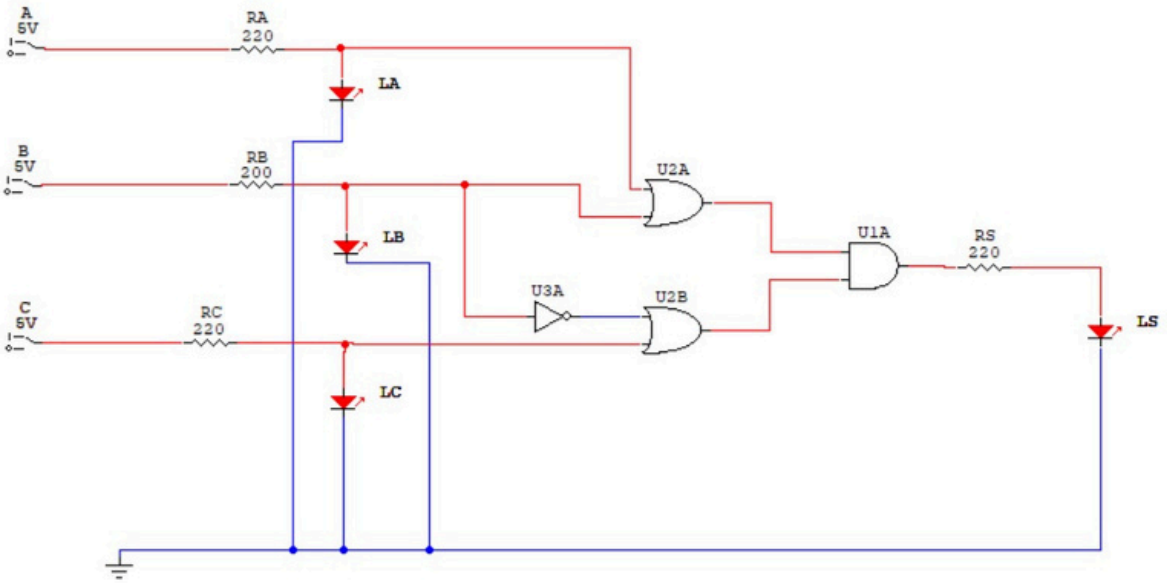

A	B	C	S
0	0	0	**0**
0	0	1	**0**
0	1	0	**1**
0	1	1	**1**
1	0	0	**0**
1	0	1	**1**
1	1	0	**1**
1	1	1	**1**