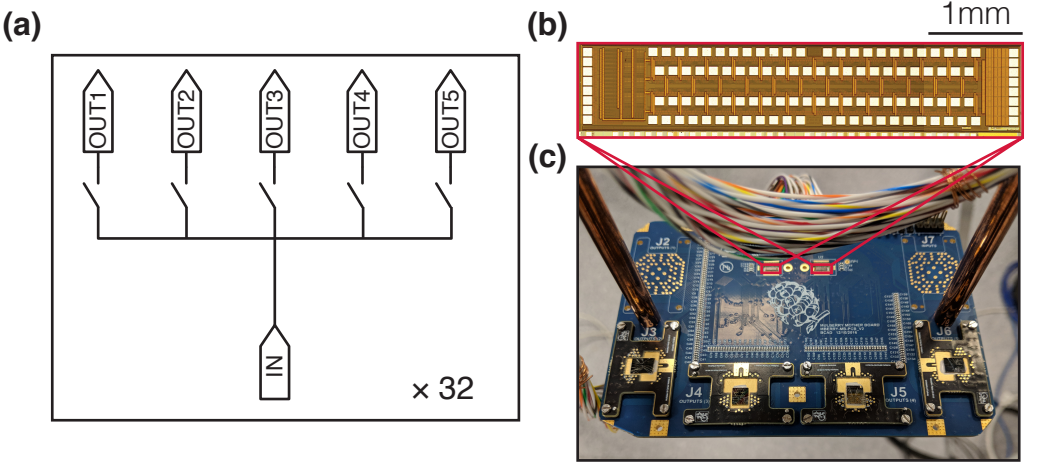
(a)
OUT1
OUT2
OUT3
OUT4
OUT5
IN
× 32
(b)
1mm
(c)
J2
J7
J3
J6
J4
J5