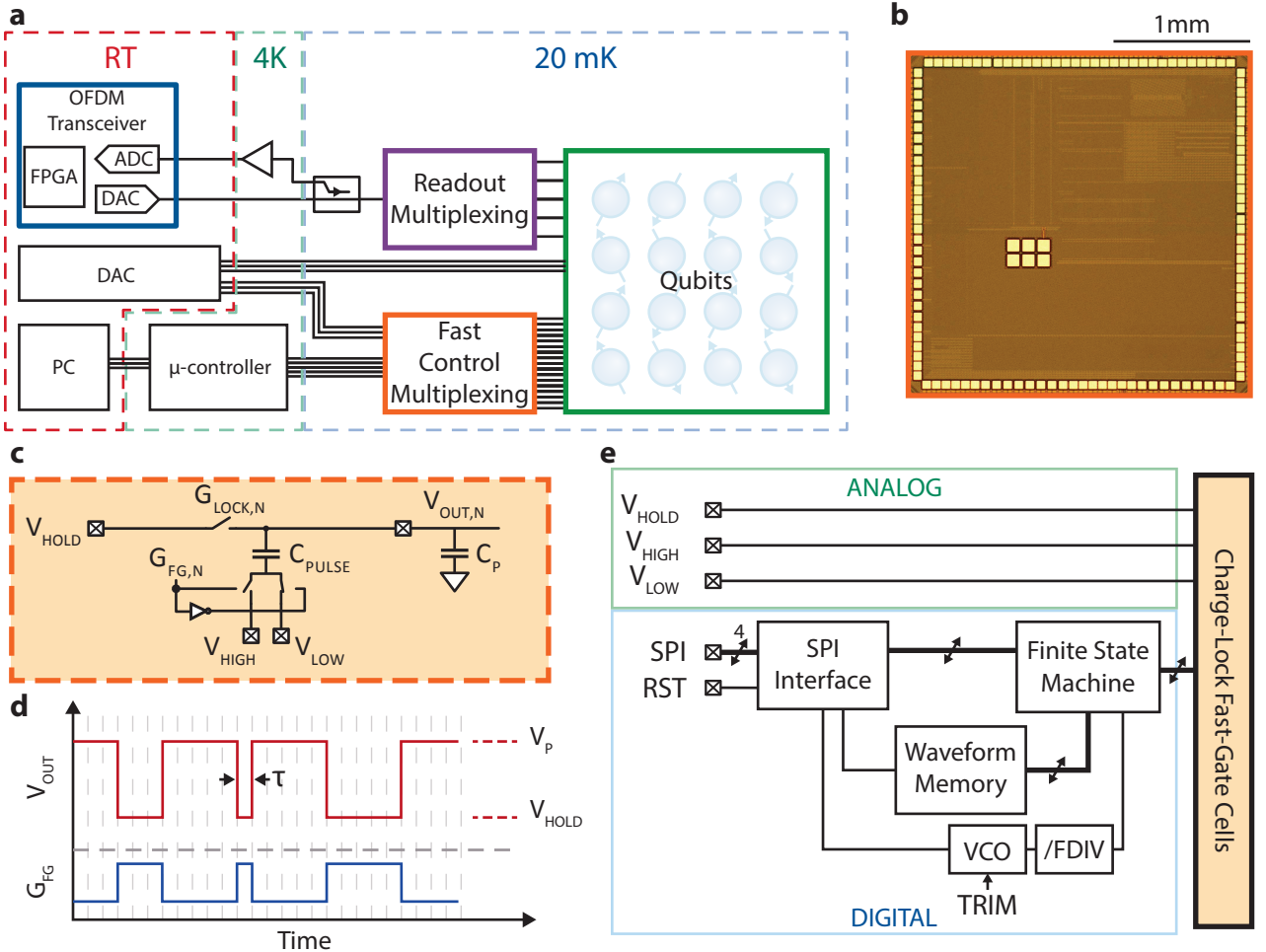
a
RT
4K
20 mK
OFDM Transceiver
FPGA
ADC
DAC
Readout Multiplexing
Qubits
DAC
PC
µ-controller
Fast Control Multiplexing
b
1mm
c
V_{HOLD}
$G_{LOCK,N}$
$V_{OUT,N}$
$G_{FG,N}$
C_{PULSE}
C_P
V_{HIGH}
V_{LOW}
d
V_{OUT}
V_P
τ
V_{HOLD}
G_{FG}
Time
e
ANALOG
V_{HOLD}
V_{HIGH}
V_{LOW}
SPI
RST
4
SPI Interface
Finite State Machine
Waveform Memory
VCO
/FDIV
TRIM
DIGITAL
Charge-Lock Fast-Gate Cells