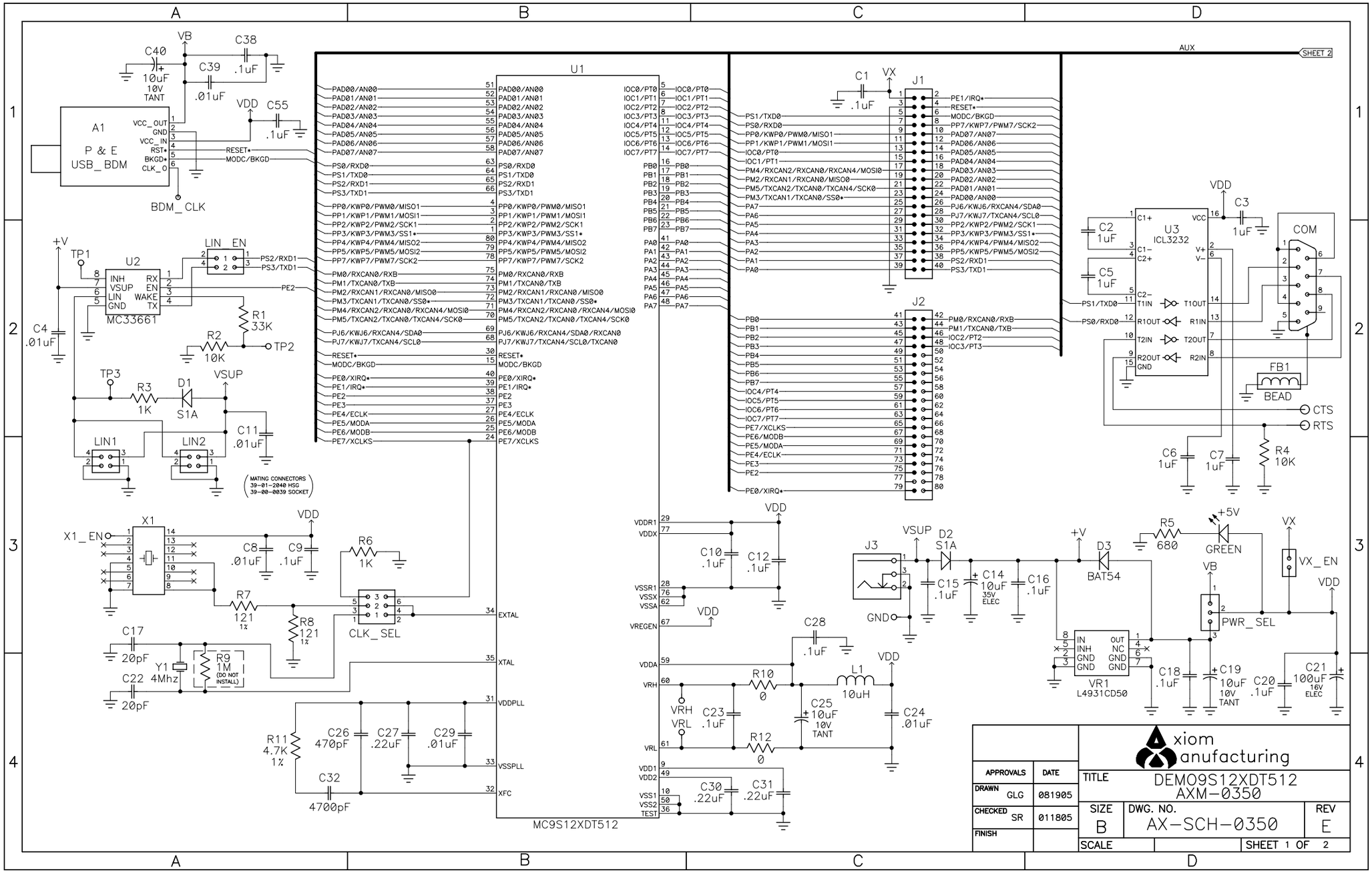
U1
MC9S12XDT512
A1
P & E
USB_BDM
U2
MC33661
U3
ICL3232
J1
J2
J3
X1
VR1
L4931CD50
COM
FB1
BEAD
CLK_SEL
PWR_SEL
LIN1
LIN2
MATING CONNECTORS
39-01-2040 HSG
39-00-0039 SOCKET
AUX
SHEET 2
axiom manufacturing
TITLE
DEMO9S12XDT512
AXM-0350
APPROVALS
DATE
DRAWN GLG 081905
CHECKED SR 011805
FINISH
SIZE B
DWG. NO. AX-SCH-0350
REV E
SCALE
SHEET 1 OF 2

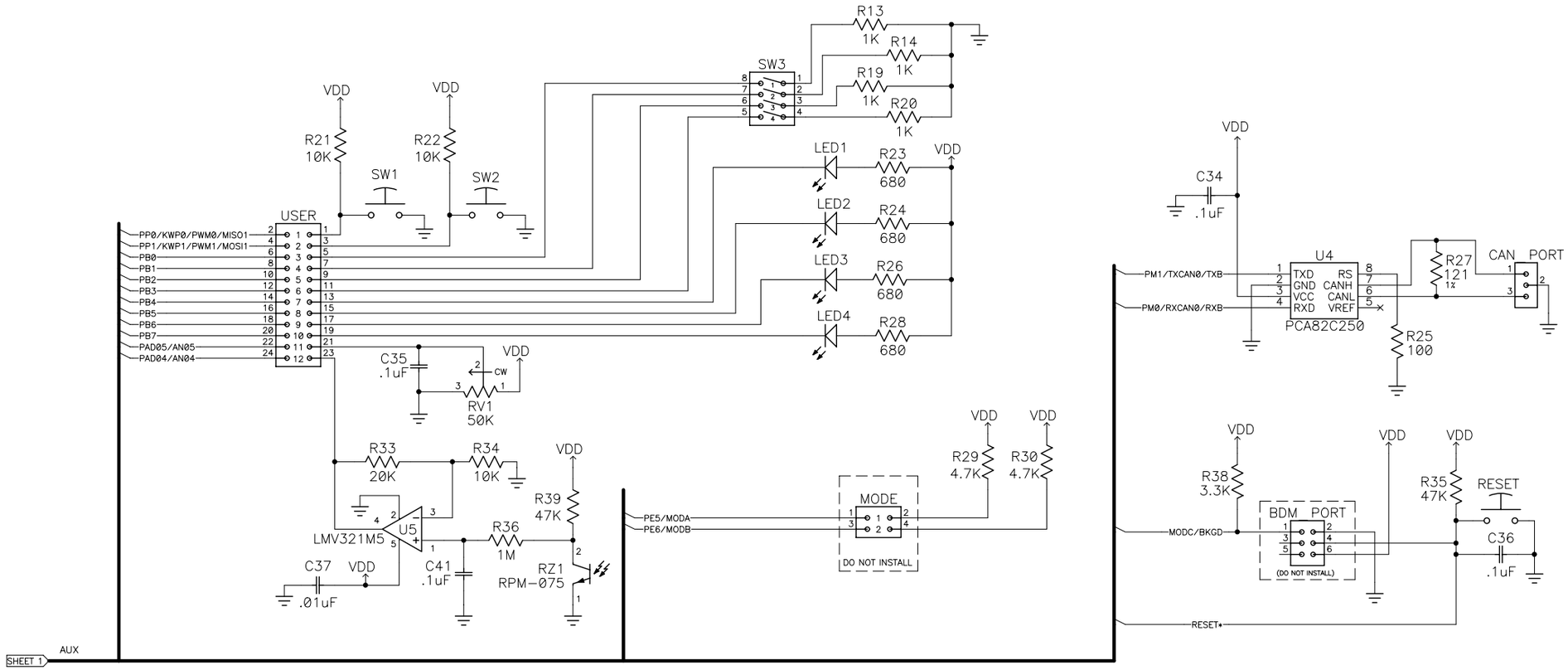

APPROVALS	DATE
DRAWN GLG	081905
CHECKED SR	011305
FINISH	

axiom manufacturing

TITLE DEMO9S12XDT512 AXM-0350

SIZE B | DWG. NO. AX-SCH-0350 | REV E

SCALE | SHEET 2 OF 2