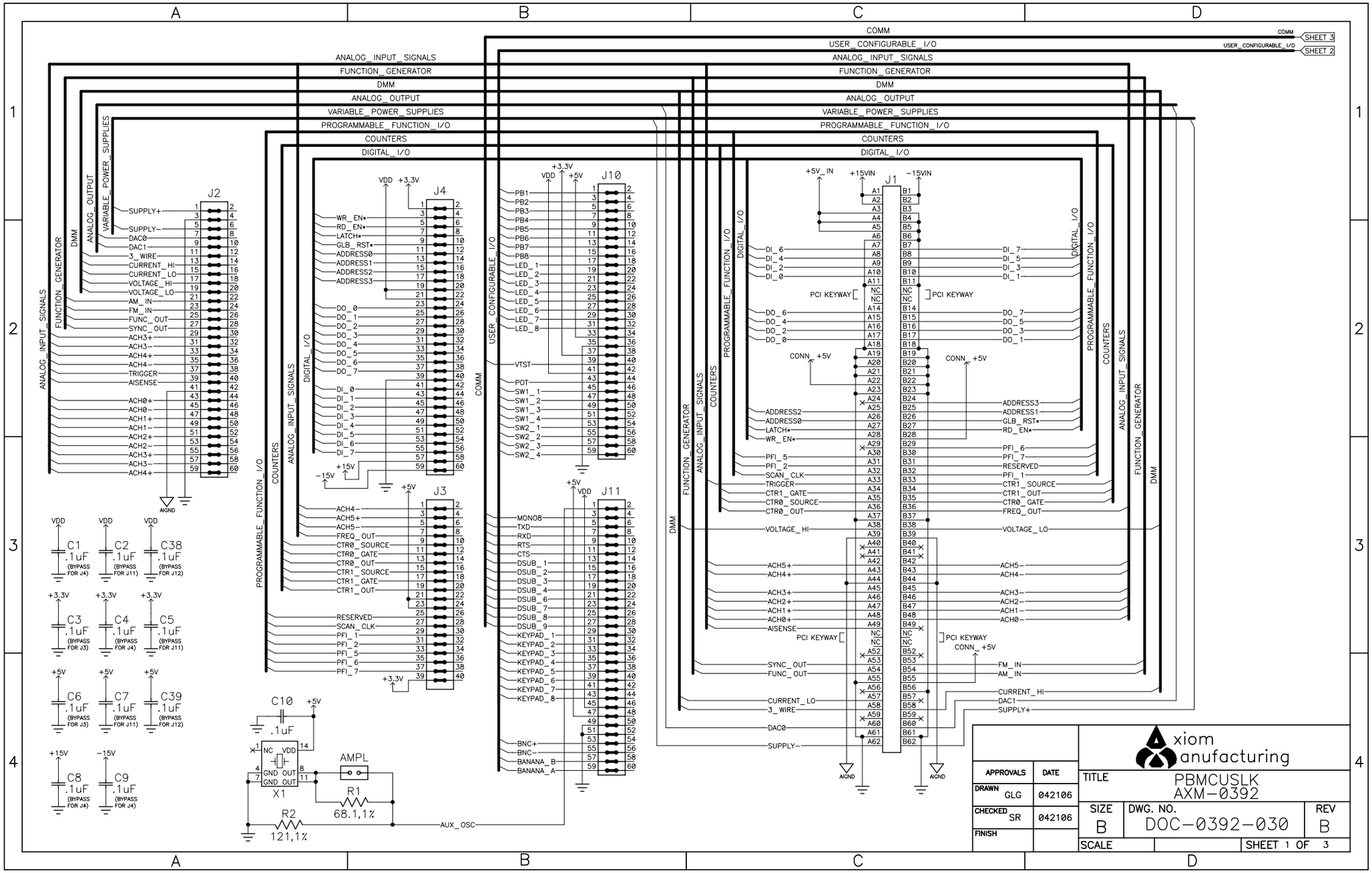
COMM
USER_CONFIGURABLE_I/O
ANALOG_INPUT_SIGNALS
FUNCTION_GENERATOR
DMM
ANALOG_OUTPUT
VARIABLE_POWER_SUPPLIES
PROGRAMMABLE_FUNCTION_I/O
COUNTERS
DIGITAL_I/O
SHEET 3
SHEET 2
J1
J2
J3
J4
J10
J11
C1 .1uF (BYPASS FOR J4)
C2 .1uF (BYPASS FOR J11)
C38 .1uF (BYPASS FOR J12)
C3 .1uF (BYPASS FOR J3)
C4 .1uF (BYPASS FOR J4)
C5 .1uF (BYPASS FOR J11)
C6 .1uF (BYPASS FOR J3)
C7 .1uF (BYPASS FOR J11)
C39 .1uF (BYPASS FOR J12)
C8 .1uF (BYPASS FOR J4)
C9 .1uF (BYPASS FOR J4)
C10 .1uF
X1
AMPL
R1 68.1,1%
R2 121,1%
AUX_OSC
AIGND
PCI KEYWAY
CONN_+5V
APPROVALS
DATE
DRAWN GLG 042106
CHECKED SR 042106
FINISH
axiom manufacturing
TITLE PBMCUSLK AXM-0392
SIZE B
DWG. NO. DOC-0392-030
REV B
SCALE
SHEET 1 OF 3

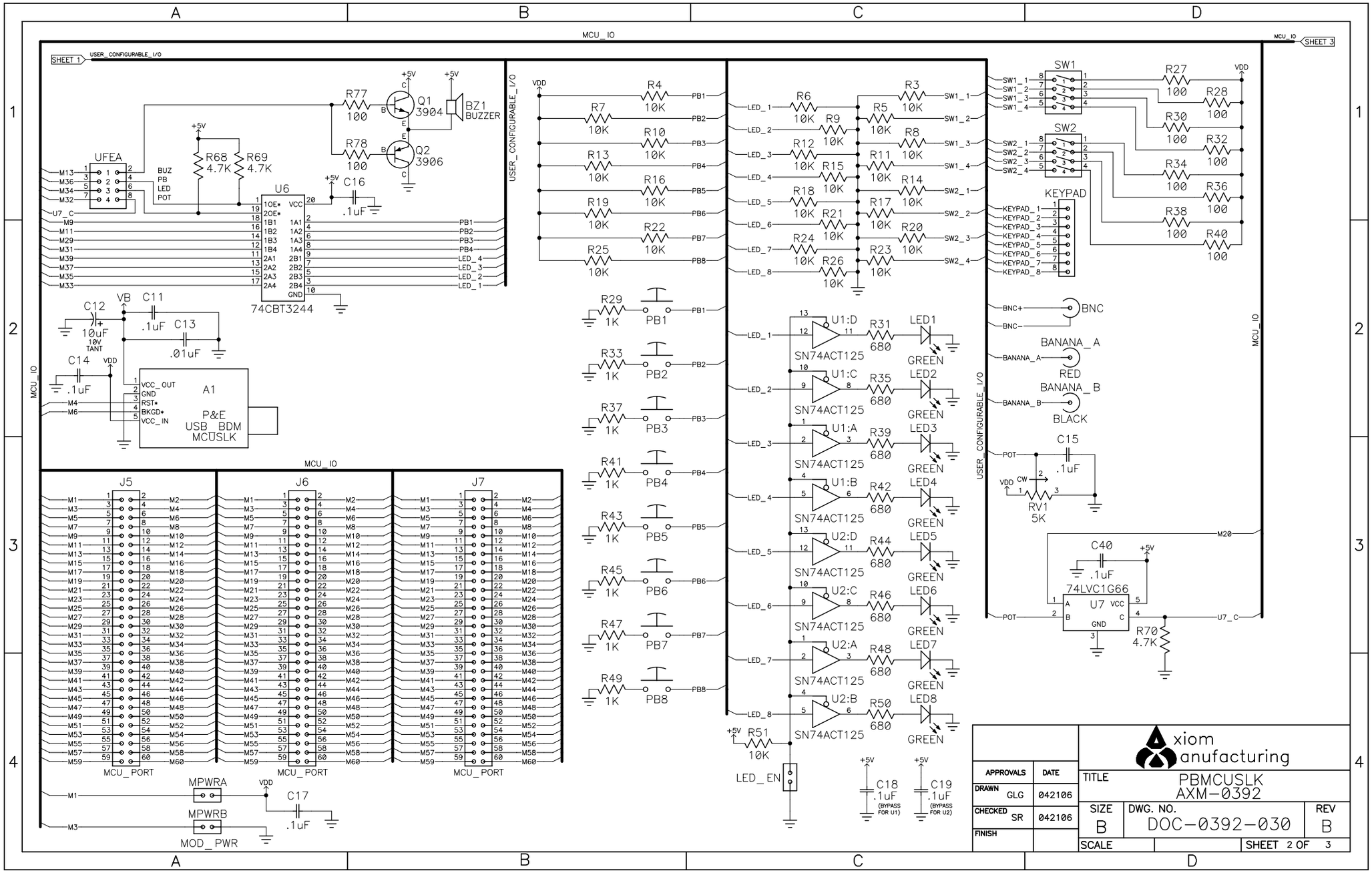
A
B
C
D
MCU_IO
SHEET 1
USER_CONFIGURABLE_I/O
SHEET 3
UFEA
BUZ
PB
LED
POT
R68 4.7K
R69 4.7K
R77 100
R78 100
Q1 3904
Q2 3906
BZ1 BUZZER
U6
74CBT3244
C16 .1uF
C12 10uF 10V TANT
C11 .1uF
C13 .01uF
C14 .1uF
A1
P&E USB BDM MCUSLK
J5
J6
J7
MCU_PORT
MPWRA
MPWRB
MOD_PWR
C17 .1uF
R4 10K
R7 10K
R10 10K
R13 10K
R16 10K
R19 10K
R22 10K
R25 10K
R29 1K
R33 1K
R37 1K
R41 1K
R43 1K
R45 1K
R47 1K
R49 1K
PB1
PB2
PB3
PB4
PB5
PB6
PB7
PB8
R6 10K
R9 10K
R12 10K
R15 10K
R18 10K
R21 10K
R24 10K
R26 10K
R3 10K
R5 10K
R8 10K
R11 10K
R14 10K
R17 10K
R20 10K
R23 10K
U1:D
U1:C
U1:A
U1:B
U2:D
U2:C
U2:A
U2:B
SN74ACT125
R31 680
R35 680
R39 680
R42 680
R44 680
R46 680
R48 680
R50 680
LED1
LED2
LED3
LED4
LED5
LED6
LED7
LED8
GREEN
R51 10K
LED_EN
C18 .1uF (BYPASS FOR U1)
C19 .1uF (BYPASS FOR U2)
SW1
SW2
R27 100
R28 100
R30 100
R32 100
R34 100
R36 100
R38 100
R40 100
KEYPAD
BNC
BANANA_A
RED
BANANA_B
BLACK
C15 .1uF
RV1 5K
C40 .1uF
74LVC1G66
U7
R70 4.7K
axiom manufacturing
APPROVALS
DATE
DRAWN GLG 042106
CHECKED SR 042106
FINISH
TITLE
PBMCUSLK
AXM-0392
SIZE B
DWG. NO. DOC-0392-030
REV B
SCALE
SHEET 2 OF 3

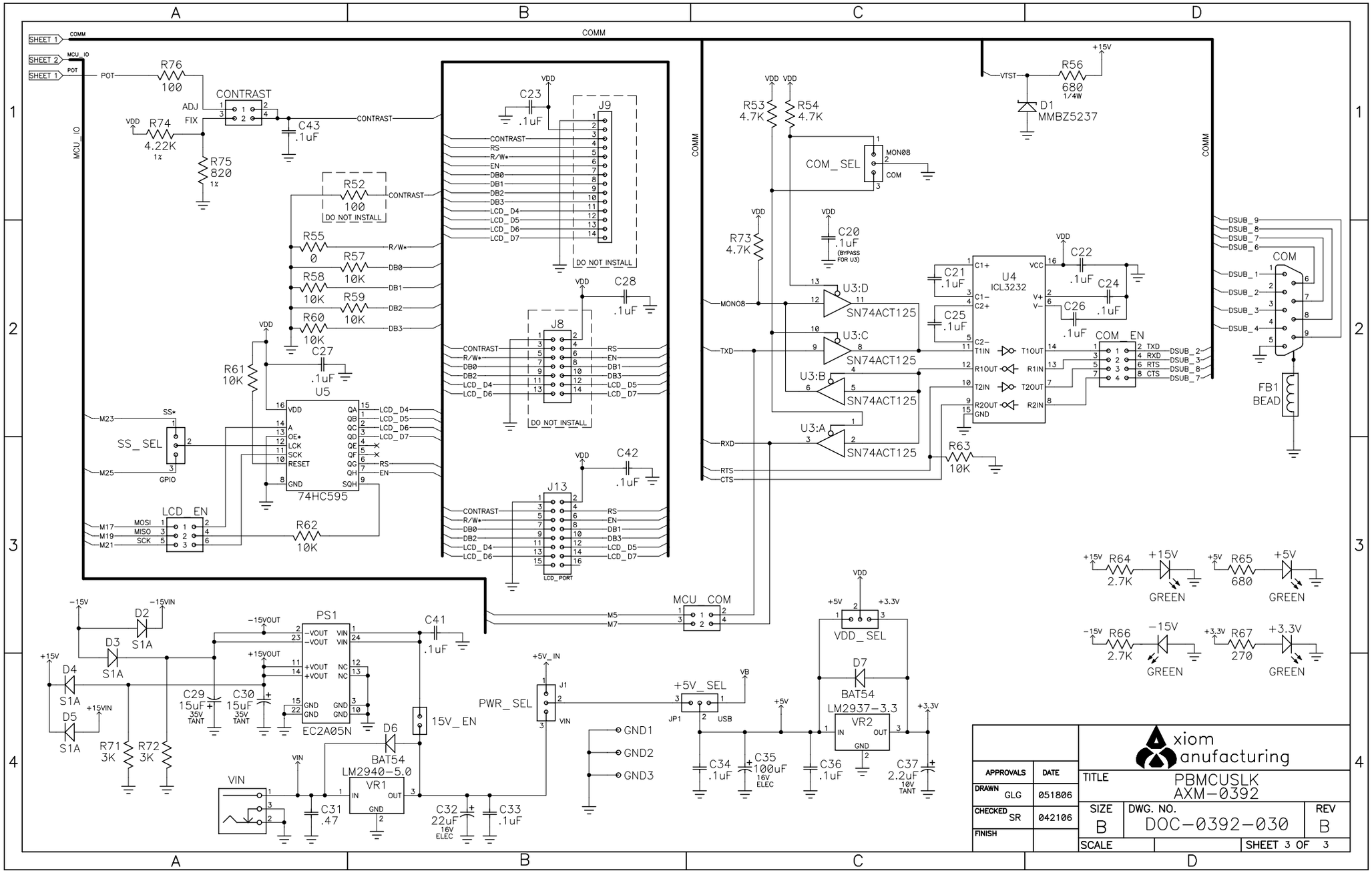
SHEET 1
SHEET 2
SHEET 1
COMM
MCU_IO
POT
R76
100
CONTRAST
ADJ
FIX
VDD
R74
4.22K
1%
R75
820
1%
C43
.1uF
R52
100
DO NOT INSTALL
R55
0
R57
10K
R58
10K
R59
10K
R60
10K
R61
10K
C27
.1uF
U5
74HC595
SS_SEL
GPIO
LCD_EN
MOSI
MISO
SCK
R62
10K
C23
.1uF
J9
DO NOT INSTALL
C28
.1uF
J8
DO NOT INSTALL
C42
.1uF
J13
LCD_PORT
R53
4.7K
R54
4.7K
COM_SEL
MON08
COM
R73
4.7K
C20
.1uF
(BYPASS FOR U3)
U3:D
U3:C
U3:B
U3:A
SN74ACT125
U4
ICL3232
C21
.1uF
C22
.1uF
C24
.1uF
C25
.1uF
C26
.1uF
COM_EN
TXD
RXD
RTS
CTS
R63
10K
VTST
R56
680
1/4W
D1
MMBZ5237
+15V
COM
DSUB_9
DSUB_8
DSUB_7
DSUB_6
DSUB_1
DSUB_2
DSUB_3
DSUB_4
FB1
BEAD
R64
2.7K
+15V
GREEN
R65
680
+5V
GREEN
R66
2.7K
−15V
GREEN
R67
270
+3.3V
GREEN
MCU_COM
M5
M7
VDD_SEL
D7
BAT54
LM2937-3.3
VR2
C34
.1uF
C35
100uF
16V ELEC
C36
.1uF
C37
2.2uF
10V TANT
+5V_SEL
JP1
USB
VB
PWR_SEL
J1
VIN
+5V_IN
GND1
GND2
GND3
D2
S1A
D3
S1A
D4
S1A
D5
S1A
R71
3K
R72
3K
PS1
EC2A05N
C29
15uF
35V TANT
C30
15uF
35V TANT
C41
.1uF
15V_EN
D6
BAT54
LM2940-5.0
VR1
C31
.47
C32
22uF
16V ELEC
C33
.1uF
VIN
axiom manufacturing
APPROVALS
DATE
DRAWN GLG 051806
CHECKED SR 042106
FINISH
TITLE
PBMCUSLK
AXM-0392
SIZE B
DWG. NO. DOC-0392-030
REV B
SCALE
SHEET 3 OF 3