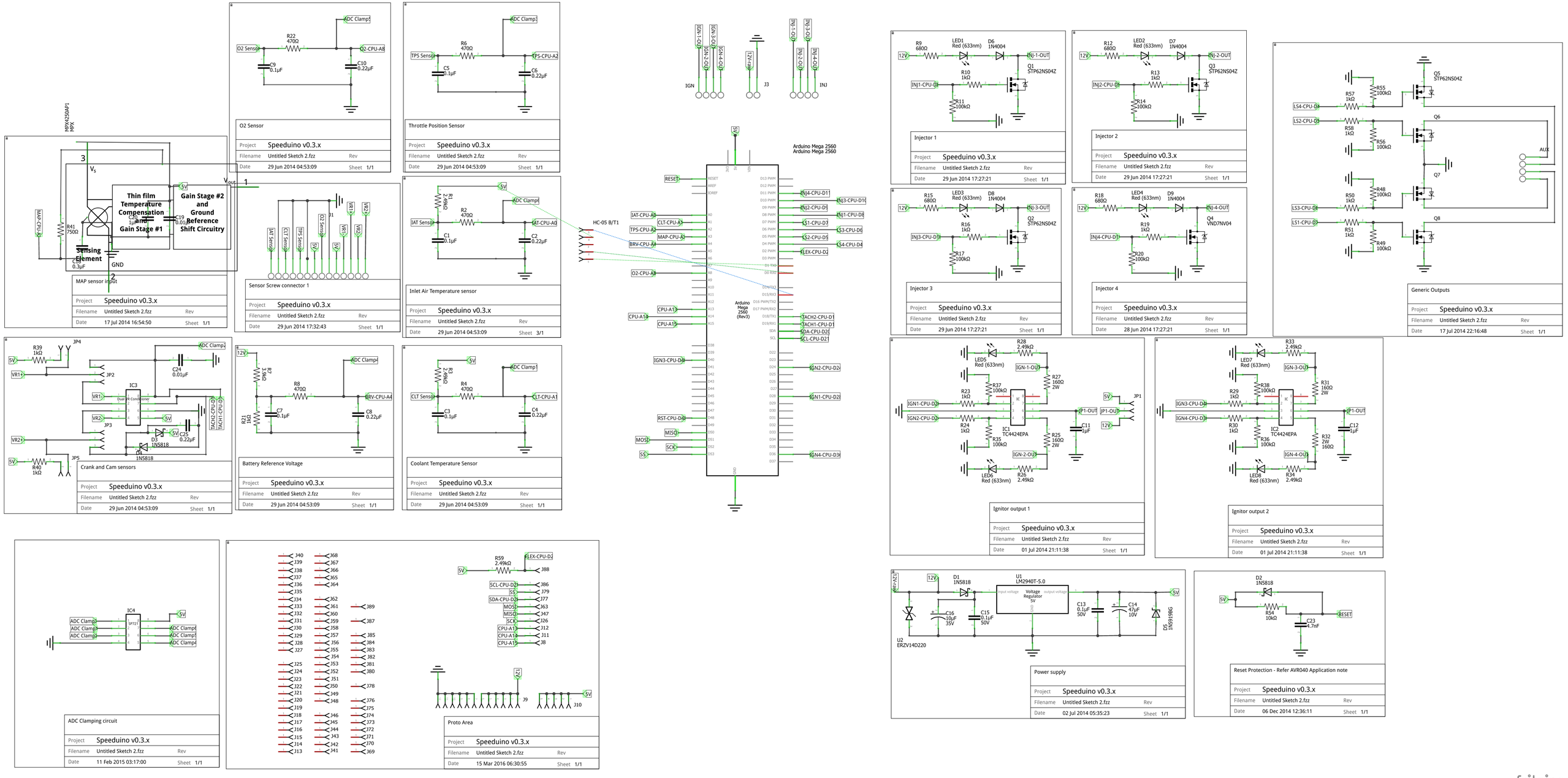
O2 Sensor
Project Speeduino v0.3.x
Filename Untitled Sketch 2.fzz
Date 29 Jun 2014 04:53:09
Throttle Position Sensor
Project Speeduino v0.3.x
Filename Untitled Sketch 2.fzz
Date 29 Jun 2014 04:53:09
MAP sensor input
Project Speeduino v0.3.x
Filename Untitled Sketch 2.fzz
Date 17 Jul 2014 16:54:50
Sensor Screw connector 1
Project Speeduino v0.3.x
Filename Untitled Sketch 2.fzz
Date 29 Jun 2014 17:32:43
Inlet Air Temperature sensor
Project Speeduino v0.3.x
Filename Untitled Sketch 2.fzz
Date 29 Jun 2014 04:53:09
Crank and Cam sensors
Project Speeduino v0.3.x
Filename Untitled Sketch 2.fzz
Date 29 Jun 2014 04:53:09
Battery Reference Voltage
Project Speeduino v0.3.x
Filename Untitled Sketch 2.fzz
Date 29 Jun 2014 04:53:09
Coolant Temperature Sensor
Project Speeduino v0.3.x
Filename Untitled Sketch 2.fzz
Date 29 Jun 2014 04:53:09
Arduino Mega 2560
Arduino Mega 2560
HC-05 B/T1
Injector 1
Project Speeduino v0.3.x
Filename Untitled Sketch 2.fzz
Date 29 Jun 2014 17:27:21
Injector 2
Project Speeduino v0.3.x
Filename Untitled Sketch 2.fzz
Date 29 Jun 2014 17:27:21
Injector 3
Project Speeduino v0.3.x
Filename Untitled Sketch 2.fzz
Date 29 Jun 2014 17:27:21
Injector 4
Project Speeduino v0.3.x
Filename Untitled Sketch 2.fzz
Date 28 Jun 2014 17:27:21
Generic Outputs
Project Speeduino v0.3.x
Filename Untitled Sketch 2.fzz
Date 17 Jul 2014 22:16:48
Ignitor output 1
Project Speeduino v0.3.x
Filename Untitled Sketch 2.fzz
Date 01 Jul 2014 21:11:38
Ignitor output 2
Project Speeduino v0.3.x
Filename Untitled Sketch 2.fzz
Date 01 Jul 2014 21:11:38
ADC Clamping circuit
Project Speeduino v0.3.x
Filename Untitled Sketch 2.fzz
Date 11 Feb 2015 03:17:00
Proto Area
Project Speeduino v0.3.x
Filename Untitled Sketch 2.fzz
Date 15 Mar 2016 06:30:55
Power supply
Project Speeduino v0.3.x
Filename Untitled Sketch 2.fzz
Date 02 Jul 2014 05:35:23
Reset Protection - Refer AVR040 Application note
Project Speeduino v0.3.x
Filename Untitled Sketch 2.fzz
Date 06 Dec 2014 12:36:11