Sheet 1

File: sheet1.kicad_sch

Sheet_2

File: Sheet2.kicad_sch

Sheet_3

File: sheet3.kicad_sch

Sheet_4

File: sheet4.kicad_sch

Sheet_5

File: sheet5.kicad_sch

Sheet_6

File: sheet6.kicad_sch

Sheet_7

File: sheet7.kicad_sch

Sheet_8

File: sheet8.kicad_sch

Sheet_9

File: sheet9.kicad_sch

Sheet_10

File: sheet10.kicad_sch

Sheet_11

File: Sheet11.kicad_sch

Based on Mad5160 (Madcat)

Created by Felipe Spencer Picada

Sheet: /

File: DubaiXTClone.kicad_sch

Title: DUBAI-XT-CLONE TURBO 8 Mhz

Size: A4	Date: 18/01/2026	**Rev: v2.0**
KiCad E.D.A. 9.0.6		Id: 1/12

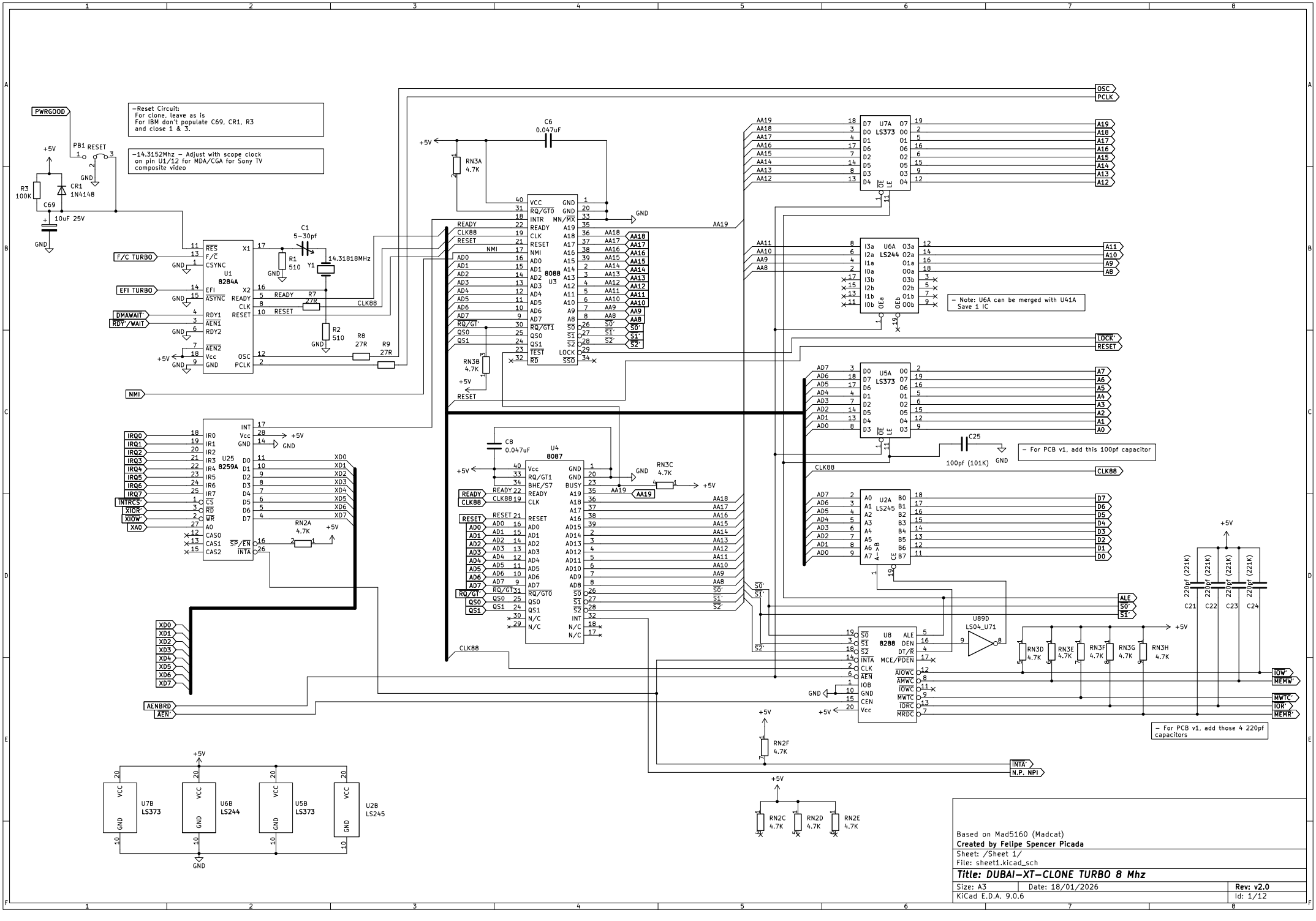
–Reset Circuit:
For clone, leave as is
For IBM don't populate C69, CR1, R3
and close 1 & 3.
–14.3152Mhz – Adjust with scope clock
on pin U1/12 for MDA/CGA for Sony TV
composite video
– Note: U6A can be merged with U41A
Save 1 IC
– For PCB v1, add this 100pf capacitor
– For PCB v1, add those 4 220pf
capacitors
U1
8284A
U3
8088
U4
8087
U25
8259A
U7A
LS373
U6A
LS244
U5A
LS373
U2A
LS245
U8
8288
U89D
LS04_U71
U7B
LS373
U6B
LS244
U5B
LS373
U2B
LS245
Based on Mad5160 (Madcat)
Created by Felipe Spencer Picada
Sheet: /Sheet 1/
File: sheet1.kicad_sch
Title: DUBAI–XT–CLONE TURBO 8 Mhz
Size: A3
Date: 18/01/2026
Rev: v2.0
KiCad E.D.A. 9.0.6
Id: 1/12

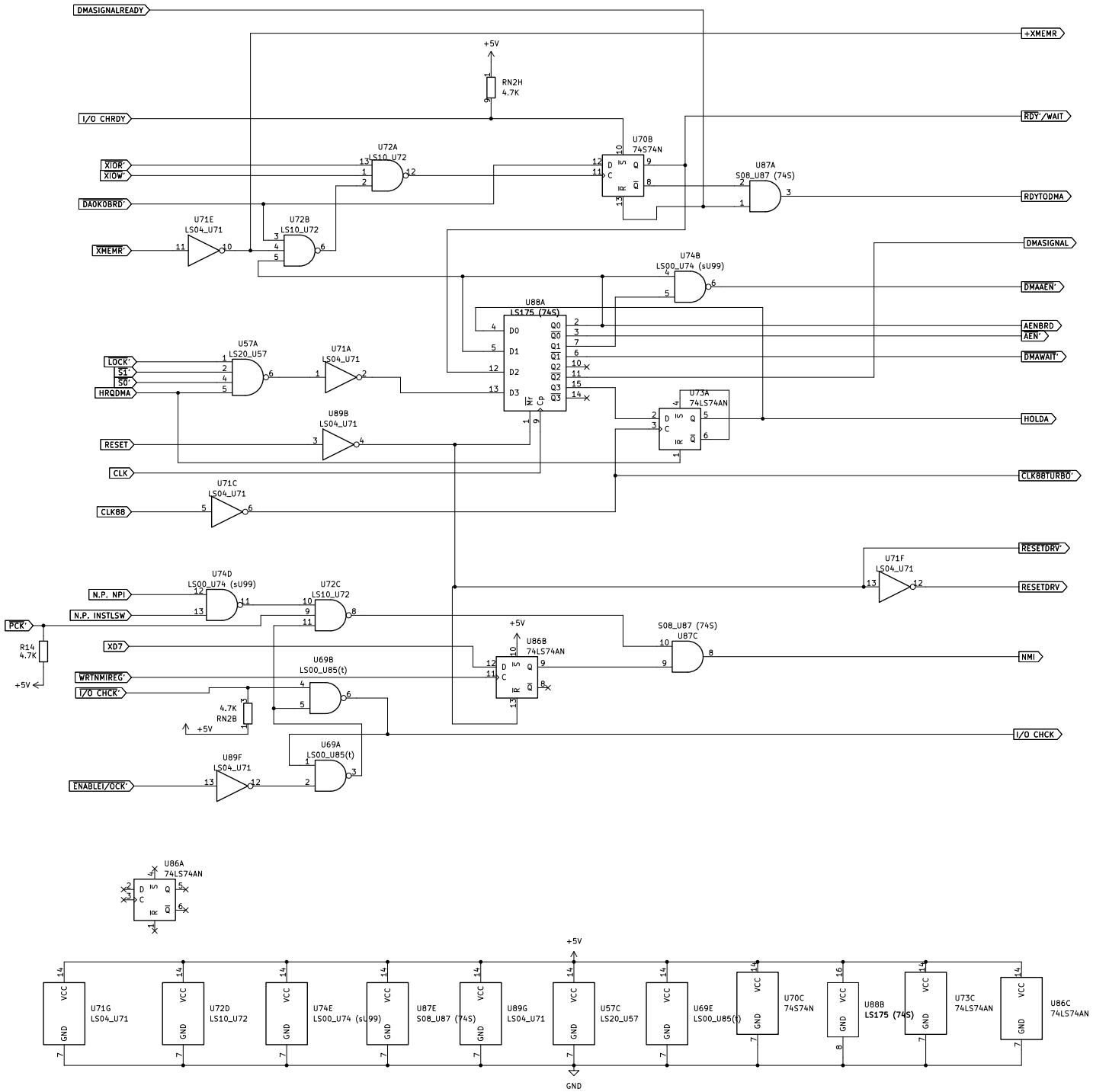

Based on Mad5160 (Madcat)

Created by Felipe Spencer Picada

Sheet: /Sheet_2/

File: Sheet2.kicad_sch

Title: DUBAI-XT-CLONE TURBO 8 Mhz

Size: A3	Date: 18/01/2026	**Rev: v2.0**
KiCad E.D.A. 9.0.6		Id: 3/12

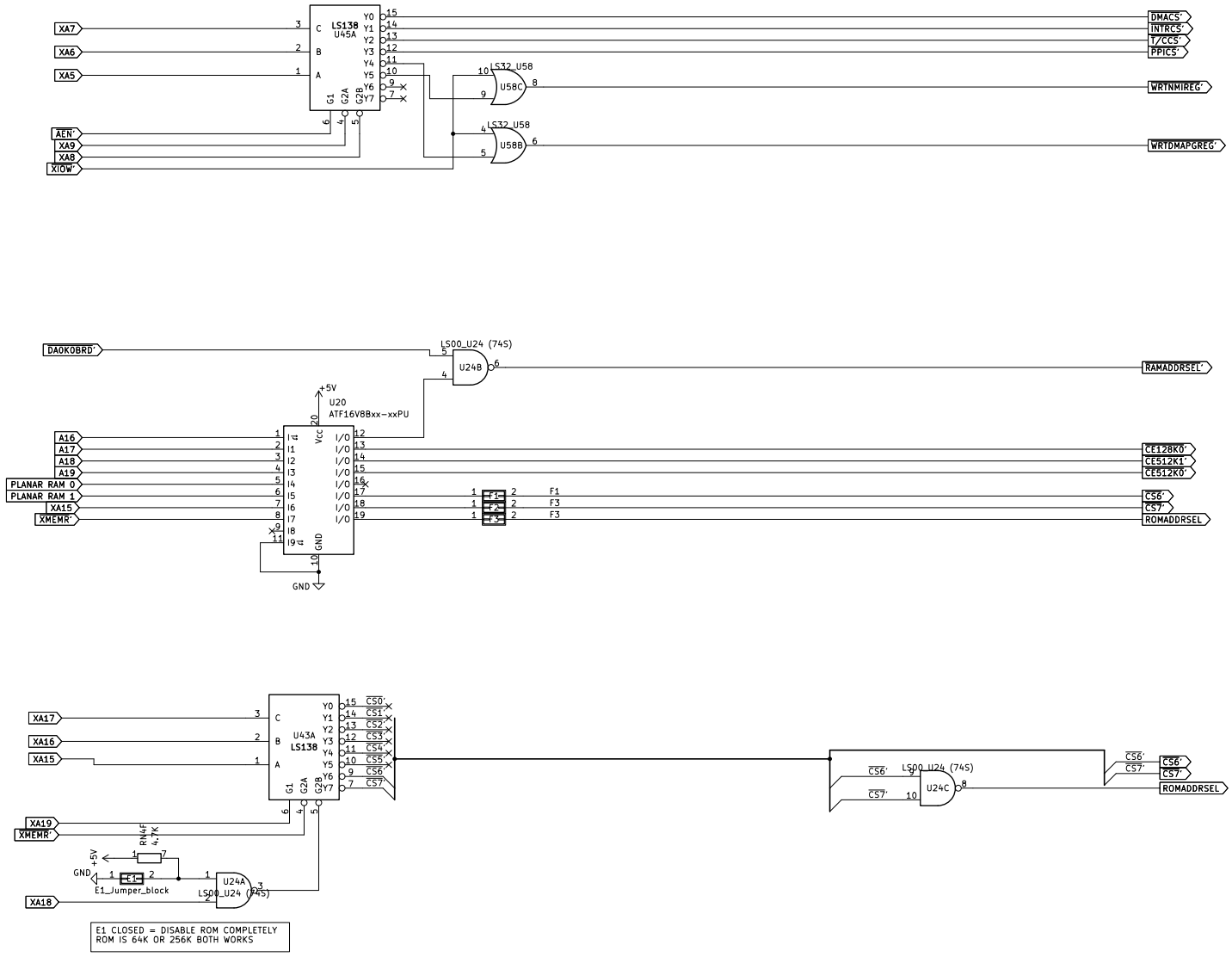

Based on Mad5160 (Madcat)

Created by Felipe Spencer Picada

Sheet: /Sheet_3/

File: sheet3.kicad_sch

Title: DUBAI-XT-CLONE TURBO 8 Mhz

Size: A3	Date: 18/01/2026	**Rev: v2.0**
KiCad E.D.A. 9.0.6		Id: 4/12

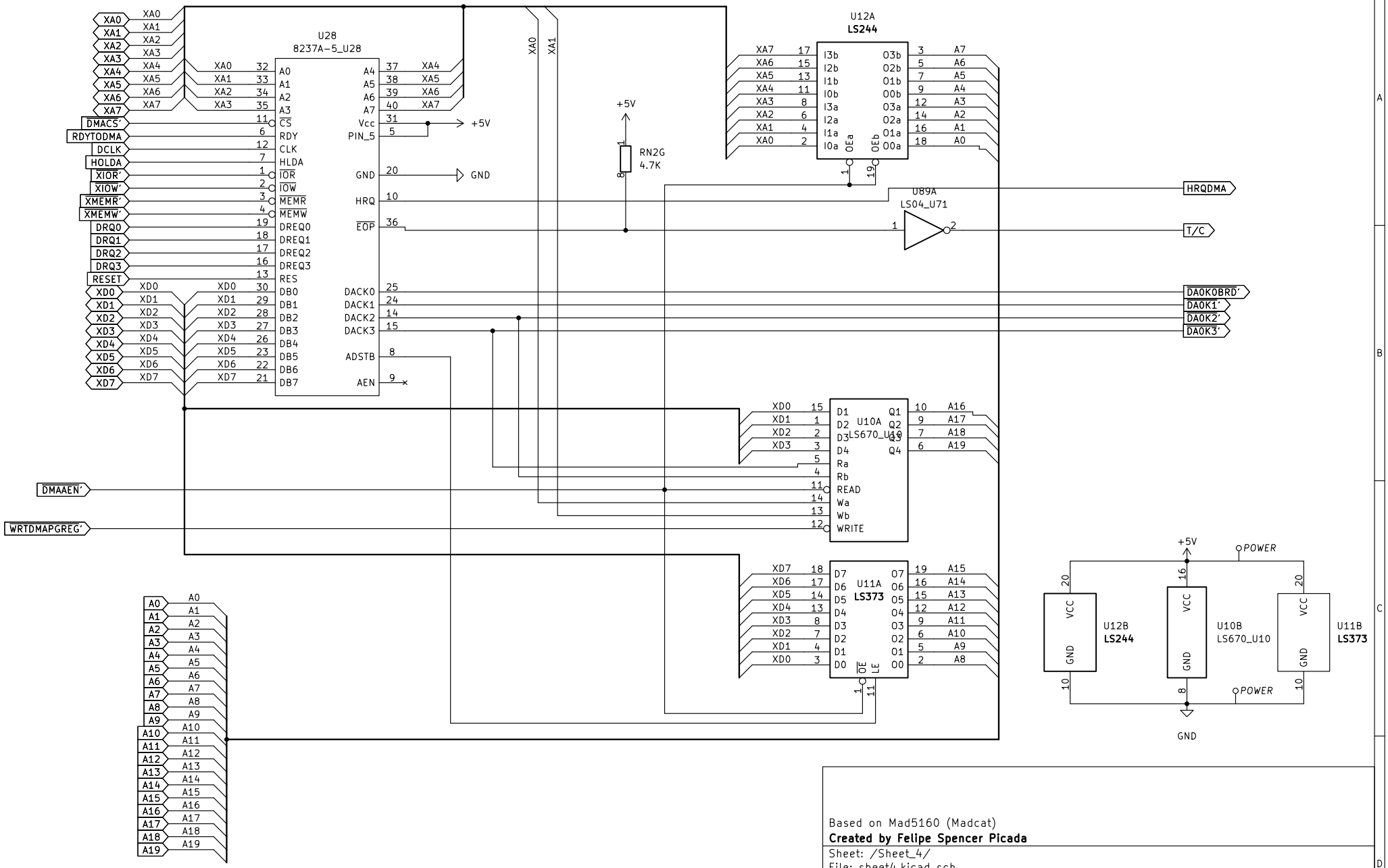

Based on Mad5160 (Madcat)

Created by Felipe Spencer Picada

Sheet: /Sheet_4/

File: sheet4.kicad_sch

Title: DUBAI-XT-CLONE TURBO 8 Mhz

Size: A4	Date: 18/01/2026	**Rev: v2.0**
KiCad E.D.A. 9.0.6		Id: 5/12

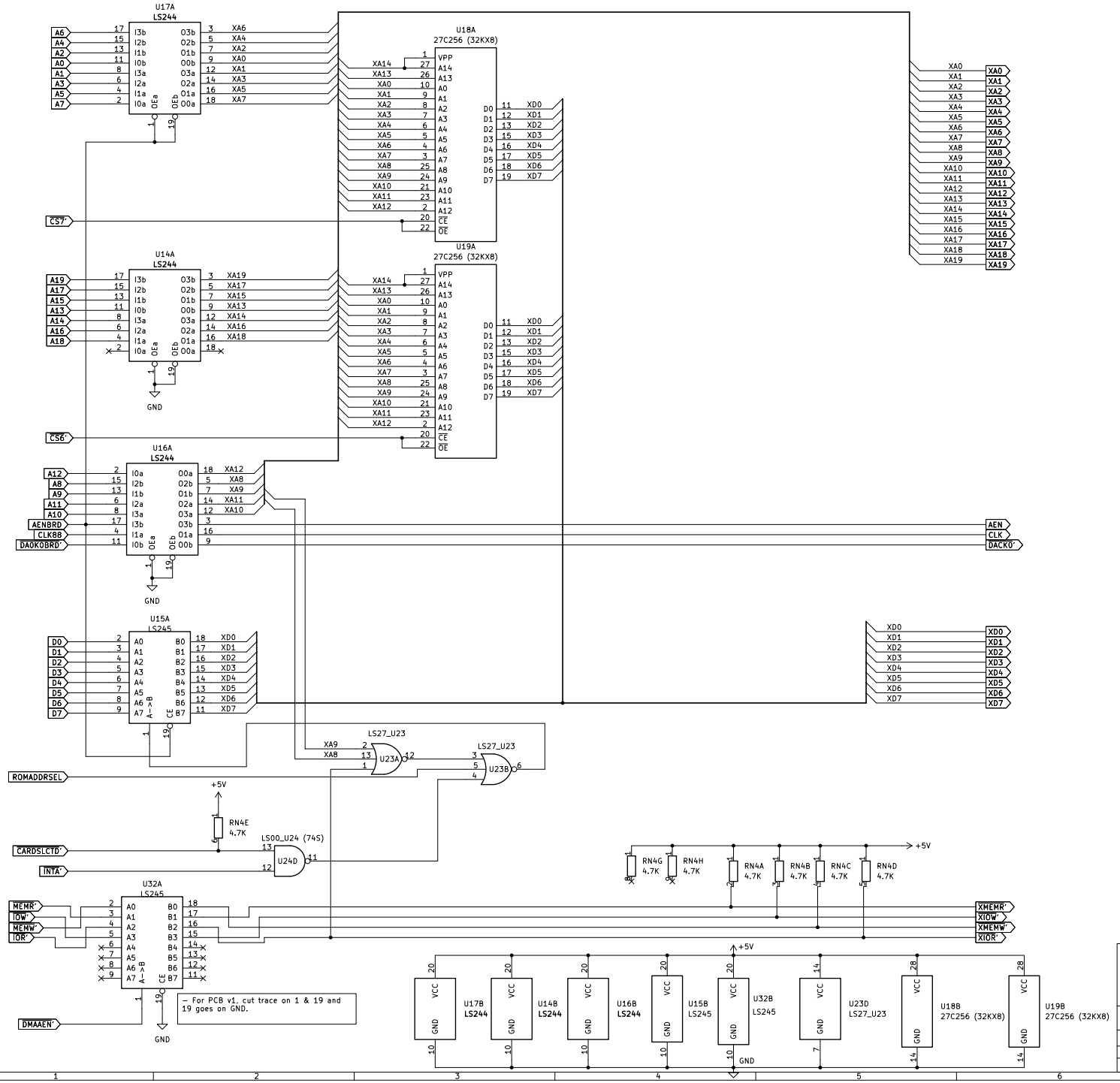

Based on Mad5160 (Madcat)
Created by Felipe Spencer Picada
Sheet: /Sheet_5/
File: sheet5.kicad_sch

Title: DUBAI-XT-CLONE TURBO 8 Mhz

Size: A3	Date: 18/01/2026	**Rev: v2.0**
KiCad E.D.A. 9.0.6		Id: 6/12

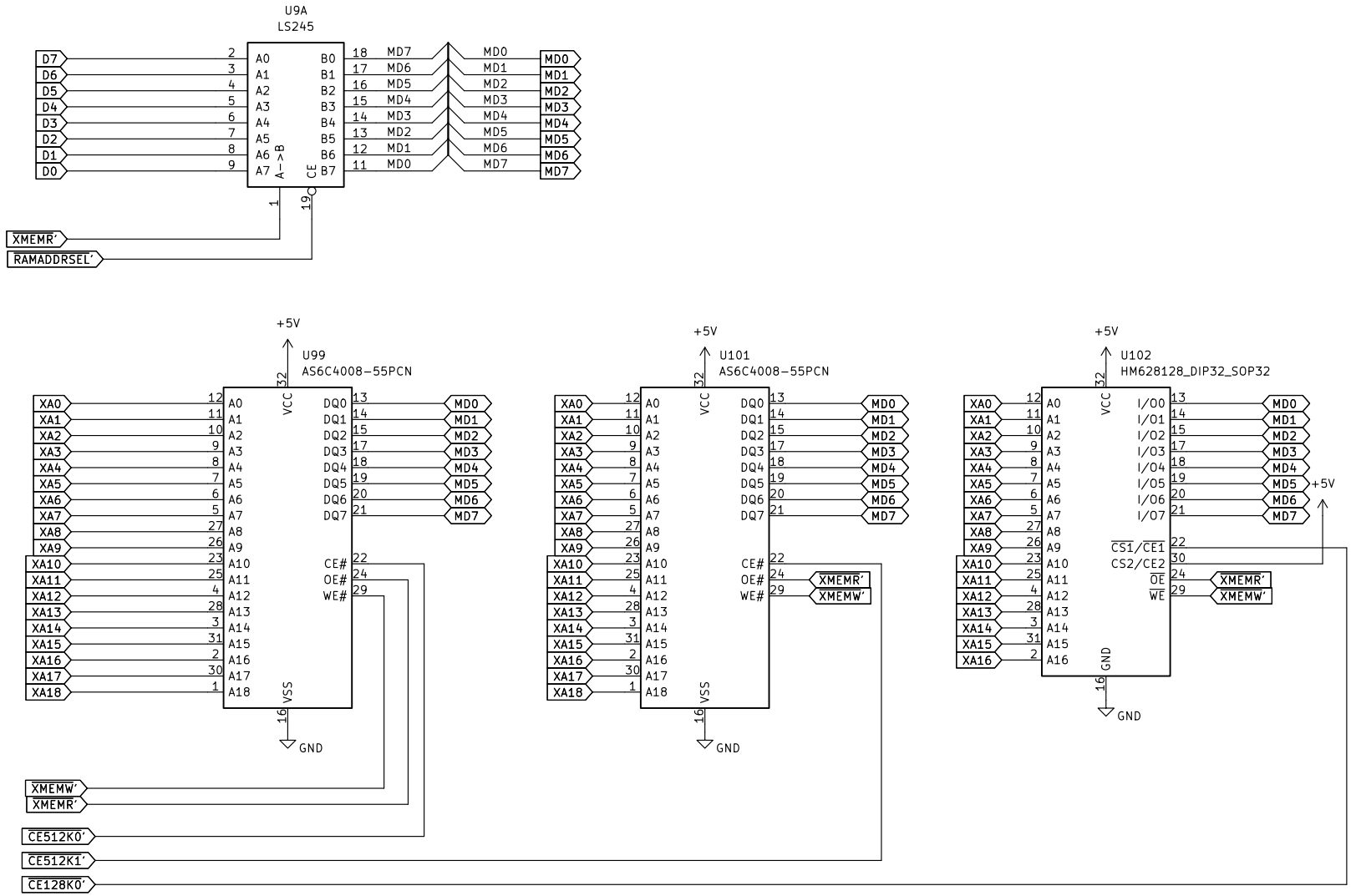

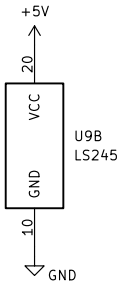

Based on Mad5160 (Madcat)

Created by Felipe Spencer Picada

Sheet: /Sheet_6/

File: sheet6.kicad_sch

Title: DUBAI-XT-CLONE TURBO 8 Mhz

Size: A4	Date: 18/01/2026	**Rev: v2.0**
KiCad E.D.A. 9.0.6		Id: 7/12

Place holder for RTC & XTMax

Based on Mad5160 (Madcat)
Created by Felipe Spencer Picada

Sheet: /Sheet_7/
File: sheet7.kicad_sch

Title: DUBAI-XT-CLONE TURBO 8 Mhz

Size: A2	Date: 18/01/2026	Rev: v2.0
KiCad E.D.A. 9.0.6		Id: 8/12

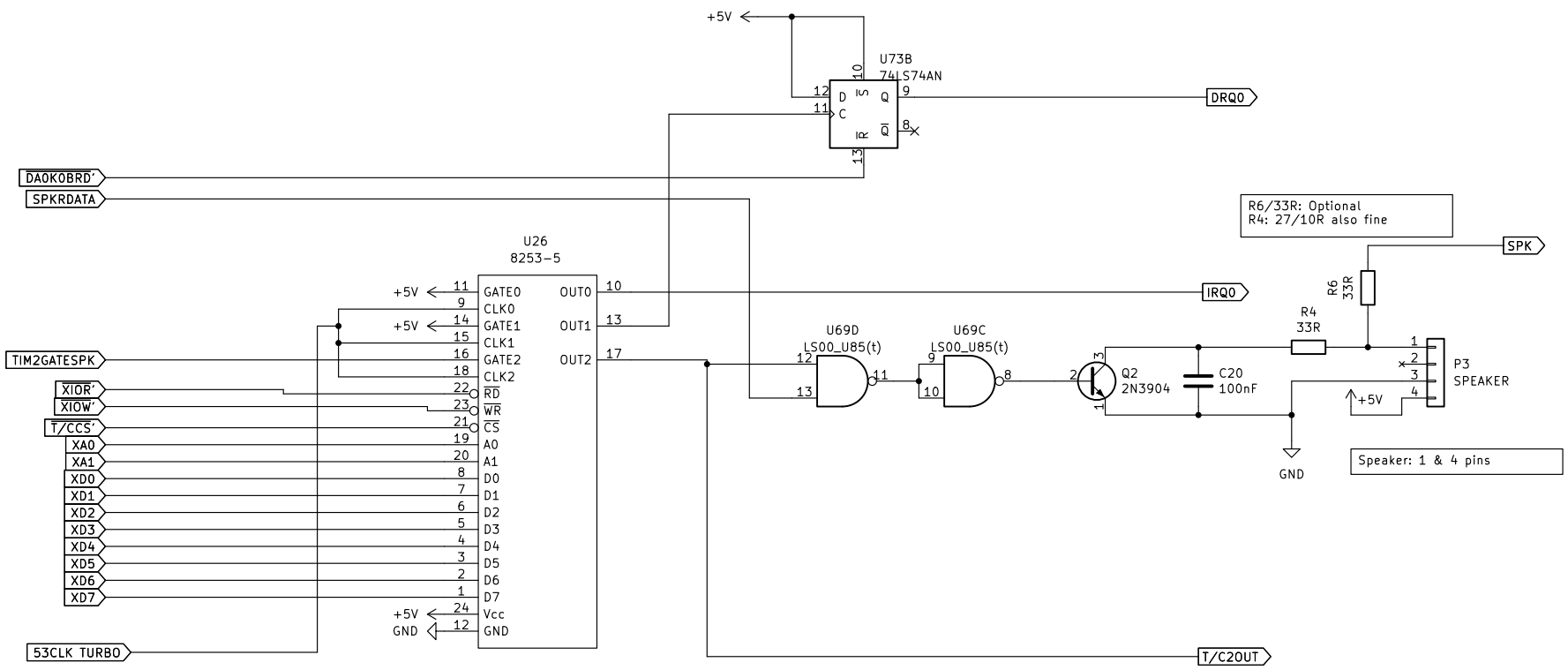

Based on Mad5160 (Madcat)

Created by Felipe Spencer Picada

Sheet: /Sheet_8/

File: sheet8.kicad_sch

Title: DUBAI-XT-CLONE TURBO 8 Mhz

Size: A4	Date: 18/01/2026	**Rev: v2.0**
KiCad E.D.A. 9.0.6		Id: 9/12

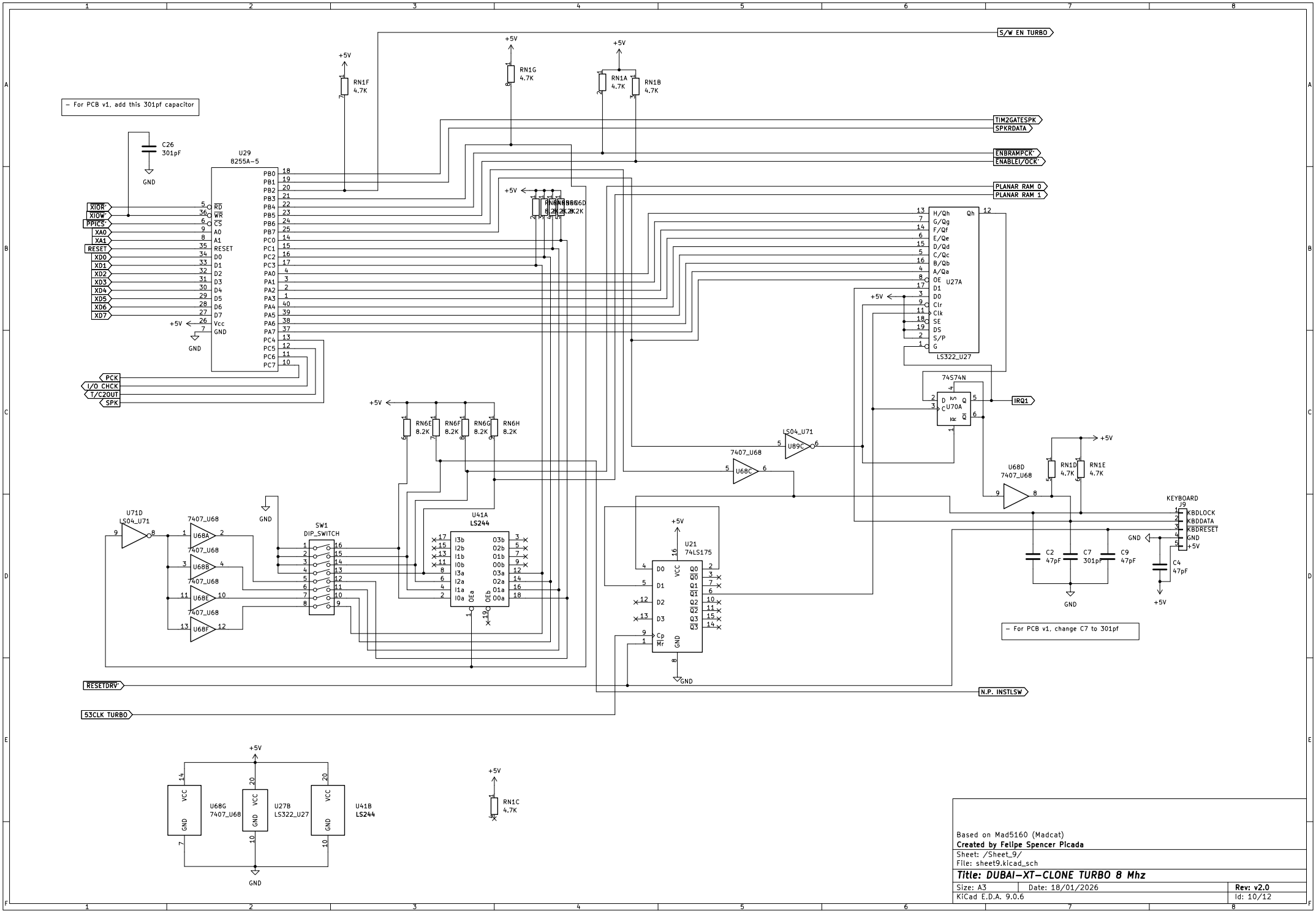
S/W EN TURBO
TIM2GATESPK
SPKRDATA
ENBRAMPCK'
ENABLE1/OCK'
PLANAR RAM 0
PLANAR RAM 1
IRQ1
RESETDRV'
N.P. INSTLSW
53CLK TURBO
- For PCB v1, add this 301pf capacitor
- For PCB v1, change C7 to 301pf
U29
8255A-5
U27A
LS322_U27
74S74N
U70A
U41A
LS244
U21
74LS175
SW1
DIP_SWITCH
KEYBOARD
J9
KBDLOCK
KBDDATA
KBDRESET
U68G
7407_U68
U27B
LS322_U27
U41B
LS244
RN1C
4.7K
Based on Mad5160 (Madcat)
Created by Felipe Spencer Picada
Sheet: /Sheet_9/
File: sheet9.kicad_sch
Title: DUBAI-XT-CLONE TURBO 8 Mhz
Size: A3
Date: 18/01/2026
Rev: v2.0
KiCad E.D.A. 9.0.6
Id: 10/12

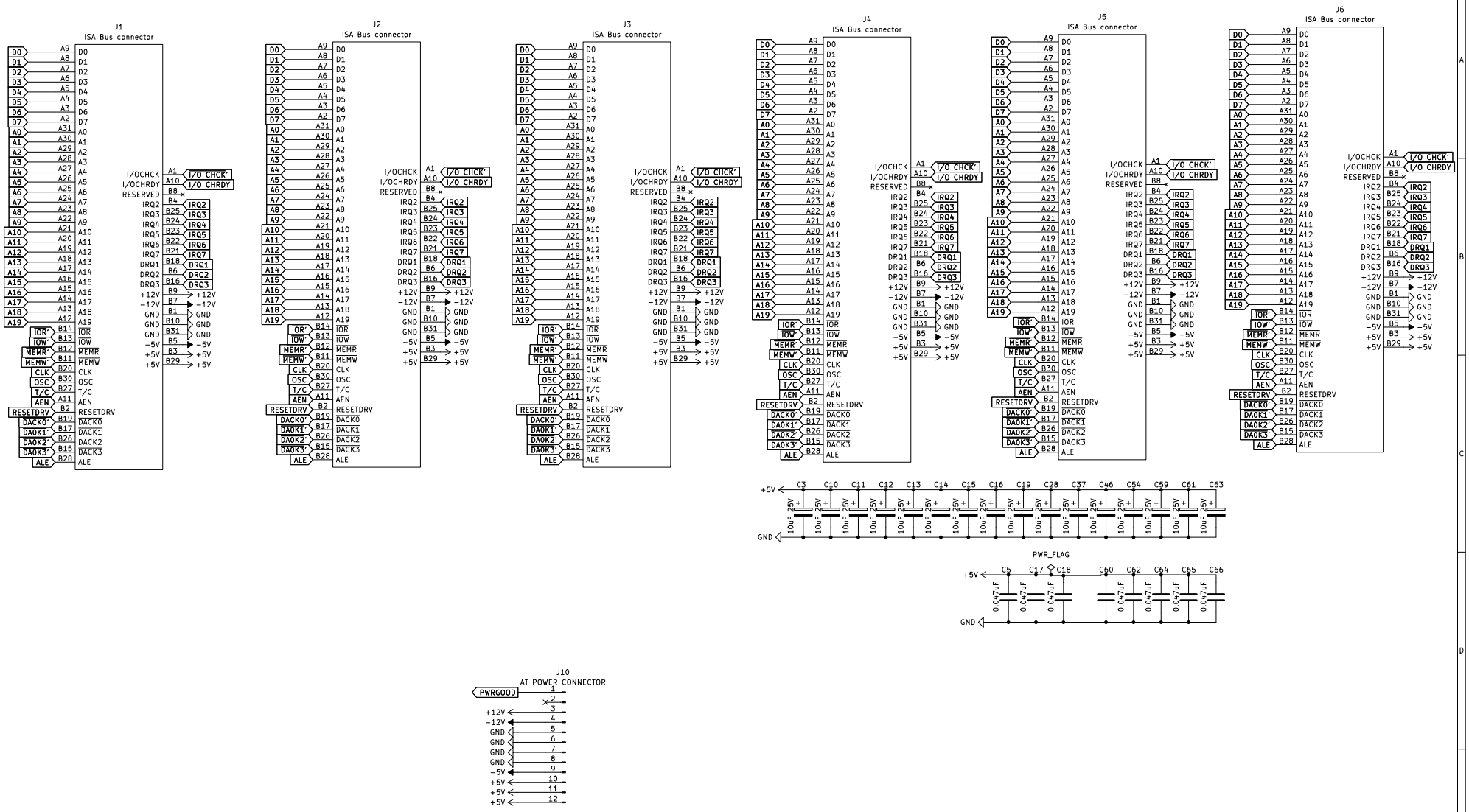

Based on Mad5160 (Madcat)

Created by Felipe Spencer Picada

Sheet: /Sheet_10/

File: sheet10.kicad_sch

Title: DUBAI-XT-CLONE TURBO 8 Mhz

Size: A3	Date: 18/01/2026	**Rev: v2.0**
KiCad E.D.A. 9.0.6		Id: 11/12

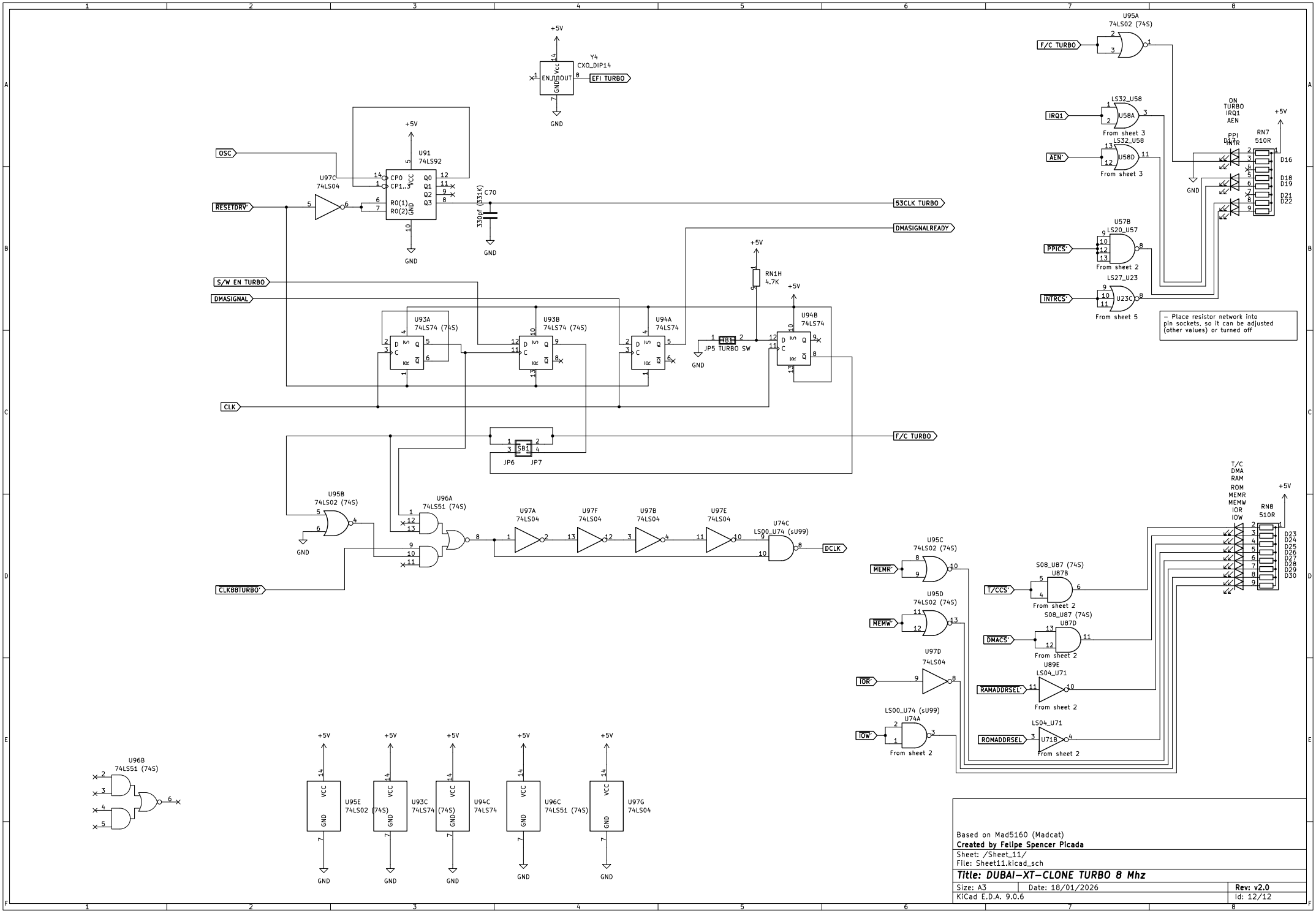
Y4
CXO_DIP14
EFI TURBO
+5V
GND
U91
74LS92
U97C
74LS04
OSC
RESETDRV'
C70
330pf (331K)
53CLK TURBO
DMASIGNALREADY
S/W EN TURBO
DMASIGNAL
CLK
RN1H
4.7K
JP5 TURBO SW
U93A
74LS74 (74S)
U93B
74LS74 (74S)
U94A
74LS74
U94B
74LS74
JP6
JP7
F/C TURBO
U95B
74LS02 (74S)
U96A
74LS51 (74S)
U97A
74LS04
U97F
74LS04
U97B
74LS04
U97E
74LS04
U74C
LS00_U74 (sU99)
DCLK
CLK8BTURBO'
U95A
74LS02 (74S)
LS32_U58
U58A
U58D
From sheet 3
IRQ1
AEN'
ON
TURBO
IRQ1
AEN
PPI
D17
INTR
RN7
510R
D16
D18
D19
D21
D22
U57B
LS20_U57
PPICS'
From sheet 2
LS27_U23
U23C
INTRCS'
From sheet 5
– Place resistor network into
pin sockets, so it can be adjusted
(other values) or turned off
T/C
DMA
RAM
ROM
MEMR
MEMW
IOR
IOW
RN8
510R
D23
D24
D25
D26
D27
D28
D29
D30
U95C
74LS02 (74S)
MEMR'
U95D
74LS02 (74S)
MEMW'
U97D
74LS04
IOR'
LS00_U74 (sU99)
U74A
IOW'
S08_U87 (74S)
U87B
T/CCS'
U87D
DMACS'
U89E
LS04_U71
RAMADDRSEL'
U71B
ROMADDRSEL
U96B
74LS51 (74S)
U95E
74LS02 (74S)
U93C
74LS74 (74S)
U94C
74LS74
U96C
74LS51 (74S)
U97G
74LS04
Based on Mad5160 (Madcat)
Created by Felipe Spencer Picada
Sheet: /Sheet_11/
File: Sheet11.kicad_sch
Title: DUBAI-XT-CLONE TURBO 8 Mhz
Size: A3
Date: 18/01/2026
Rev: v2.0
KiCad E.D.A. 9.0.6
Id: 12/12