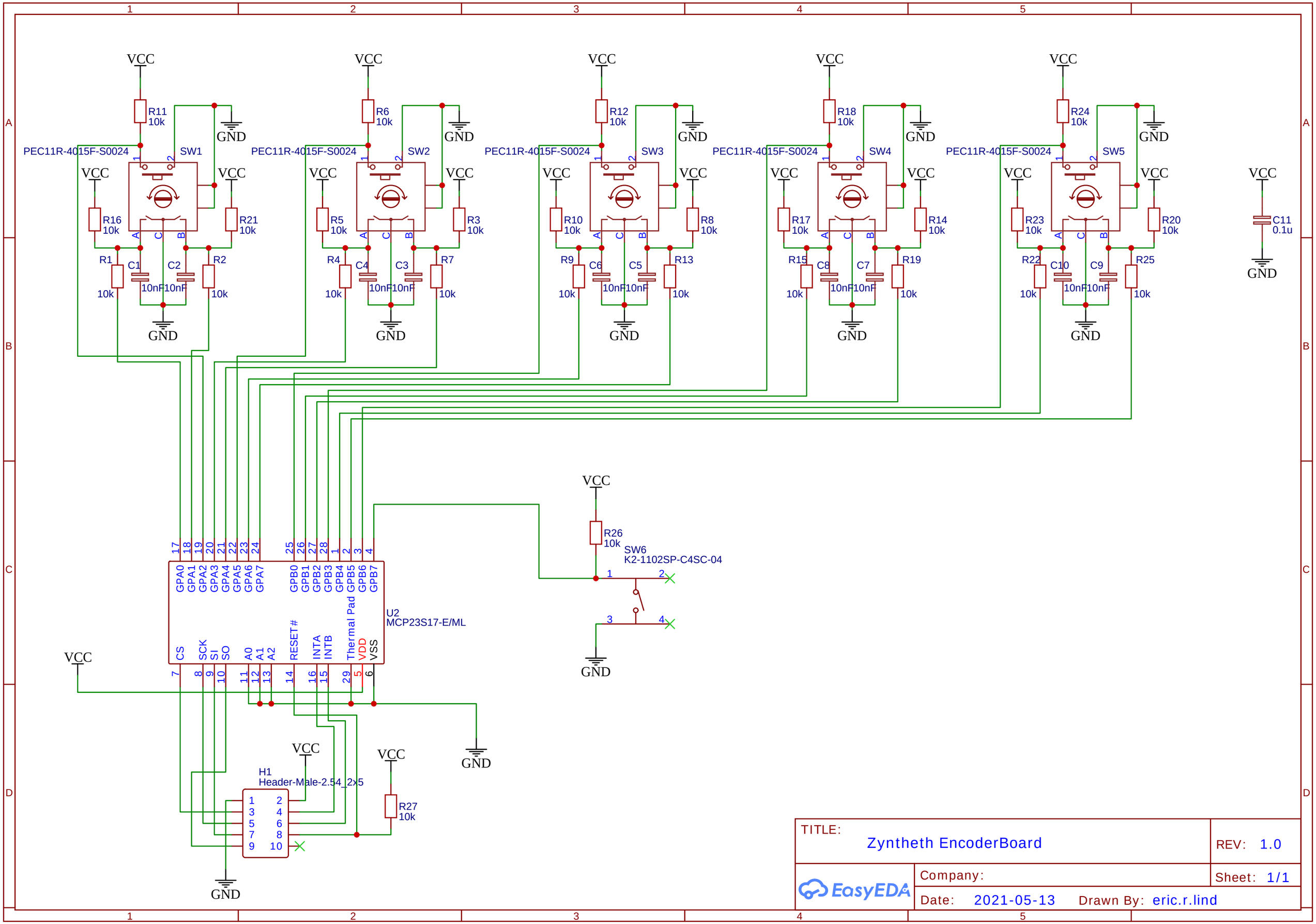


| | | |
|---|---|---|
| TITLE: Zyntheth EncoderBoard | | REV: 1.0 |
| EasyEDA | Company: | Sheet: 1/1 |
| | Date: 2021-05-13 | Drawn By: eric.r.lind |