International Future Energy Challenge 2026: Proposal

Texas A&M University

United States of America

Team Name	Team Electra
Team Members	Saadana Giri, Barlencia Clement, Dylan Mire, Brianna Lopez, Inesh Sharma, Emma Pippitt, Jesse Park, Sphoorthi Gurram, Bhavana Shree Pothuri
Supervisor(s)	Dr. John Lusher
Studies/Faculty	Electrical and Computer Engineering
Corresponding Contact Information	Saadana Giri - saadana_giri@tamu.edu Sphoorthi Gurram – gurramsphoorthi@tamu.edu

Letter of Support

Texas A&M University
Department of Electrical and Computer Engineering
College Station, Texas 77843

Date: 11/11/2025

To Whom It May Concern,

It is my pleasure to provide this letter of support for the Texas A&M University IEEE International Future Energy Challenge (IFEC) student team. As a faculty member within the Department of Electrical and Computer Engineering, I am happy to endorse this distinguished interdisciplinary team representing our university in this competition.
The Texas A&M IFEC team, comprising:

1. Saadana Giri, 2nd year, Electrical Engineering
2. Sphoorthi Gurram, 1st year, General Engineering
3. Barlencia Clement, 3rd year, Electronic Systems Engineering
4. Dylan Mire, 1st year, General Engineering
5. Jesse Park, 1st year, Computer Engineering
6. Emma Pippitt, 1st year, General Engineering
7. Brianna Lopez, 1st year, General Engineering
8. Inesh Sharma, 1st year, Computer Engineering
9. Bhavana Shree Pothuri, 2nd year, Electrical Engineering

is participating in the 2025 challenge, which tasks student teams with designing and developing an affordable bidirectional onboard electric vehicle (EV) charger. This competition requires a comprehensive integration of power electronics, control systems, embedded programming, and mechanical design to produce a system that is both technically efficient and economically viable. The Texas A&M team comprises undergraduate students from multiple engineering disciplines who are collaboratively applying their skills to advance innovation in sustainable transportation and energy systems. Their project demonstrates a strong commitment to the advancement of clean energy technologies and aligns with the broader mission of the university to foster research and development that benefits society.

As their faculty advisor, I fully support the Texas A&M IFEC team and will continue to provide technical guidance, mentorship, and access to institutional resources throughout this project. I am confident that their work will reflect the highest standards of academic and professional excellence associated with Texas A&M University.

Please do not hesitate to contact me should you require any further information.

Dr. John Lusher II
Associate Professor of Practice
Texas A&M University, Department of Electrical and Computer Engineering
Email: john.lusher@tamu.edu
Phone: 979-229-1950

Table of Contents

1. Introduction…… 4

2. Proposed Converter…… 5

   2.1 Block Diagram…… 5

   2.2 Circuit Topology…… 5

   2.3 Controller…… 7

   2.4 Design Methodology…… 8

      2.4.1 EMI Filter Design…… 8

      2.4.2 Totem-Pole PFC Design…… 9

      2.4.3 DAB Design…… 9

   2.5 Preliminary Results…… 10

3. Preliminary Work Plan…… 11

4. Summary…… 12

5. Bibliography…… 13

1. Introduction

Overview

Team Electra's approach centers on developing a cost-effective, high-efficiency, and compact bidirectional onboard EV charger that supports both grid-to-vehicle (G2V) and vehicle-to-grid (V2G) operation. The charger integrates a Totem-Pole PFC front end and a Dual Active Bridge (DAB) isolation stage to achieve >92% efficiency, near unity power factor, and full bidirectional control.

The system is run by an STM32G474 microcontroller coordinating PWM generation, digital protection, and soft-start sequencing. The project's design priorities include EMI compliance through an LCL filter, robust thermal management using an aluminum heatsink, and a modular control structure for scalability and safety.

This strategy emphasizes practical manufacturability and sustainability, aligning with Texas A&M University's goals in advancing clean energy technologies and power-electronics education.

Key Issues and Mitigations

- Transformer lead time: Place early purchase orders and identify backup vendors.
- Potential thermal risk (overheating): Apply conservative current derating, run detailed loss simulations, and validate heat-sink performance.
- Potential control-loop instability: Perform Hardware-in-the-Loop (HIL) testing and tune digital control parameters before full-power testing.
- Team coordination: Hold weekly design reviews and maintain shared project documentation.

Budget and Funding

The total budget for implementing and testing the bidirectional EV charger is approximately $600. This covers major subsystems, prototyping materials, PCB fabrication, and safety equipment. Funding will come from TAMU ThinkTank, the Texas A&M IEEE Student Chapter, and university innovation grants such as the Meloy Innovators Program, the Charlie Weldon '90 Endowed Meloy Scholarship,

and the Internal Commercialization Gap Fund. The team will also contact corporate sponsors like Texas Instruments, Infineon Technologies, and Onsemi for technical and financial support. Components sourced from Digi-Key and Mouser Electronics receive 10 - 15% educational discounts.

Educational Alignment

Participation in the 2026 IEEE IFEC advances Texas A&M University's commitment to innovation and leadership in sustainable energy systems and power electronics. This project relates to advanced coursework from ECEN 214/215 (circuit analysis and control theory), ENGY 615 (smart grid fundamentals), ENGY 631 (sustainability in energy), and ENGY 664 (energy project management) [13][14]. This initiative builds upon Texas A&M's strong ecosystem of clean energy innovation, complementing the achievements of TAMU SAE Formula Electric, WIRED Eco-Marathon, and Prototype Battery Electric Vehicle teams, all of which drive progress in electric mobility and system optimization. Furthermore, many A&M teams and researchers won awards for progress in electric vehicles including the Advancing Discovery to Market (ADM) Innovation Awards, the Emerson Overall Capstone Award, and even the third prize paper award by the IEEE Transactions on Industry Applications [12].

2. Proposed Converter

2.1 Block Diagram

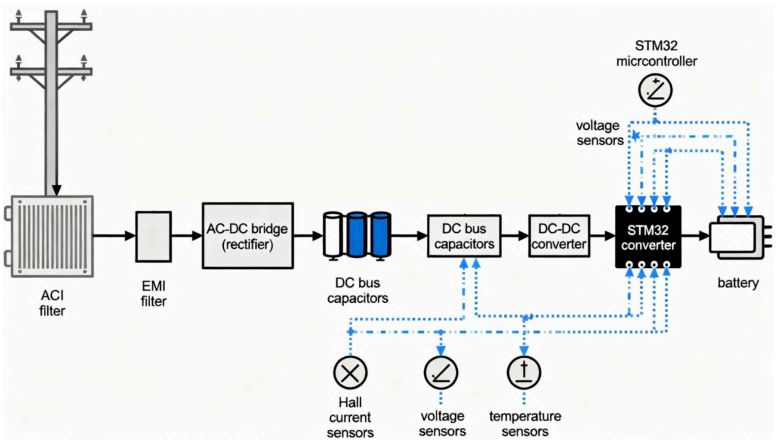

Figure 1: High-level block diagram.

2.2 Circuit Topology

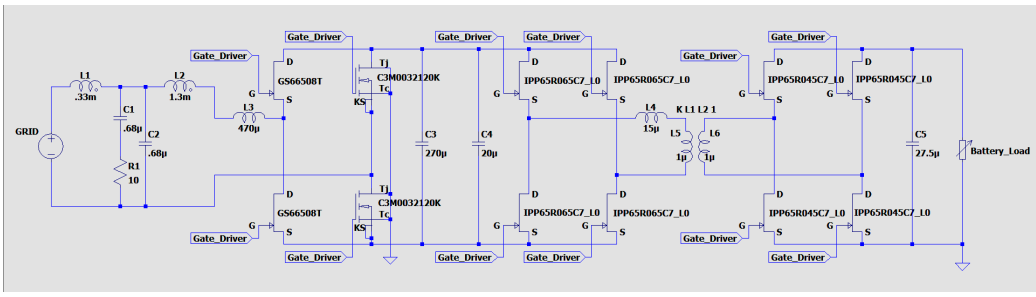

Figure 2: Detailed Schematic of OBC (LTSpice Simulation Schematic).

This onboard charger uses a bidirectional single-phase AC–DC architecture. The input from the grid passes through an LCL EMI filter. The filtered AC is actively rectified by a Totem-Pole PFC front end using GaN MOSFETs. This PFC stage outputs a regulated, high-efficiency DC bus. The DC bus then feeds a Dual Active Bridge (DAB) isolation converter built with MOSFET full-bridges and a high-frequency transformer. Phase-shift modulation of both bridges controls bidirectional power flow and galvanic isolation. The STM32 microcontroller manages PWM generation, feedback, system protection, and integrates with voltage, current, and temperature sensors for supervision. Thermal management employs a convection-cooled aluminum plate-fin heatsink with an optional fan in a compact, stackable assembly to reach a power density of 2.8 kW/L.

2.3 Controller

The core of the OBC's control and protection system is the microcontroller which was chosen for its powerful real-time processing, advanced PWM generation, and user-friendly analog interface. [10] This MCU is responsible for driving all operational modes, including charge, discharge, fault protection, standby, and vehicle-to-grid.

Sensor Architecture:

- AC Current Sensor: Placed immediately after the EMI filter [3].
- AC Voltage Sensor: Located at the grid input [2].
- DC Bus Current Sensor: Placed after the AC-DC stage [3].

- DC Bus Voltage Sensor: Directly connected across bus capacitors [2].
- Thermistors (Temperature Sensors): Located at the key heat-generating components (ex., MOSFETs, inductors, capacitors, and battery terminals) [9].
- Battery Current and Voltage Sensors: Located at the battery interface.
- Battery Temperature Sensor: Placed at the battery interface.

Soft Start (Precharge) Control:

For inrush protection, the MCU supervises the soft start circuitry using its analog voltage sensing input. At power-on, bus capacitors charge through a precharge resistor; the MCU tracks the capacitor voltage, then triggers the contactor to bypass the resistor once a safe threshold is reached. This guarantees component longevity and system stability during startup.

MCU Features and Control Strategy:

- Advanced PWM timers and high-speed ADCs are leveraged for real-time closed-loop regulation (voltage, current, and power) [11].
- Interrupt-driven routines execute urgent protection and switching actions instantly, while the main loop handles system mode management, communication interfaces, and display functions.
- The hardware comparators, on-chip DACs, and analog watchdogs provide additional rapid fault detection and system safety.

2.4 Design Methodology

2.4.1 EMI Filter Design Methodology

- The electromagnetic interference (EMI) filter passes the grid's frequency while attenuating high-frequency switching noise. The LCL topology (series inductors with shunt capacitors) provides noise suppression with minimal loss [1]. Inductors block high-frequency harmonics, and shunt capacitors divert residual noise to ground, reducing grid interference. Two capacitors improve damping, suppress resonance, and expand the attenuation range for better

stability [1]. Using two capacitors instead of additional inductors reduces cost because capacitors are significantly cheaper and smaller for the same reactive impedance, and it simplifies construction by eliminating the need for precisely wound magnetic components. This choice also allows a more compact filter layout since capacitors have lower volume, lower EMI loop area, and can be integrated directly onto the PCB without bulky magnetic cores. The passive RC damping network ensures stability, limits EMI emissions, and preserves bidirectional vehicle-to-grid functionality. Although an active filter provides less power loss, the LCL filter trades off this minimal power loss from the damping resistor for easier build and less cost [1].

2.4.2 Totem-Pole PFC Design Methodology

For the front-end grid interface, the design employs a bridgeless totem-pole PFC topology using Gallium Nitride (GaN) MOSFETs on both legs to achieve high efficiency (Table 3) and bidirectional operation [4]. GS66508T GaN MOSFETs provide ultra-fast switching with minimal reverse-recovery loss, enabling precise AC current shaping, low THD, and high-frequency operation that achieves near-unity power factor (≈ 0.99) with reduced conduction losses.

The AC input passes through a boost inductor and is alternately switched through the high- and low-frequency legs based on the AC half-cycle. Bidirectional operation is achieved by inverting the switching sequence. The all-GaN implementation reduces switching and conduction losses, improving thermal margins, power density, and efficiency [8].

Downstream, the Dual Active Bridge (DAB) stage uses Infineon CoolMOS C7 MOSFETs: IPP65R065C7 on the 400 V DC bus (primary side) and IPP65R045C7 on the battery side (secondary). Phase-shift modulation with dead time enables zero-voltage switching, maximizing efficiency and reliability in bidirectional DC conversion [5].

2.4.3 DAB Design Methodology

The Dual Active Bridge (DAB) architecture was selected to enable safe, efficient, bidirectional DC power transfer in the EV charger. Since the DAB cannot directly process AC input, a front-end active rectifier and PFC stage using MOSFETs were implemented to convert AC to high-quality DC with near-unity power factor and bidirectional capability.

The DAB stage uses two H-bridges and a high-frequency transformer for galvanic isolation and voltage step-up/down. Infineon IPP65R065C7 and IPP65R045C7 MOSFETs were chosen to minimize switching losses (Table 6) and support soft-switching at high frequencies. Phase-shift modulation with dead time enables zero-voltage switching for higher efficiency and reduced thermal stress [5].

Transformer design balanced leakage inductance reduction with required isolation and power handling (Table 5). The control strategy maximizes modulation flexibility, efficiency, and safety, forming a reliable, high-performance DAB module.

2.4.4 Heatsink Design Methodology

The thermal system ensures safe operation under continuous full load while maximizing efficiency, reliability, and resource use. The design uses an aluminum plate-fin extrusion heatsink. Aluminum's high thermal conductivity and fin geometry provide effective heat transfer from MOSFETs and inductors, while its low mass enables efficient dissipation and low cost [7]. Mounting the heatsink directly on the MOSFETs minimizes thermal resistance. Each cluster of 4 MOSFETs will have a heatsink because the MOSFETs produce 54% of the heat being lost in the charger. The aluminum heatsink provides a forced-air thermal resistance of 2.4 °C/W, significantly below the system requirement of 4.452 °C/W per MOSFET cluster for an estimated 31 W total power loss from gate, conduction, switching, and inductor losses. Safety measures include a 150 °C MOSFET junction limit and an automatic shutdown 10 °C below that, triggered after 2–10s of sustained over-temperature to

prevent false trips. This design balances thermal performance and cost while ensuring reliable long-term operation.

2.4.5 Mechanical Design

The charger uses a two-PCB stacked layout because it reduces the overall enclosure volume. All large components sit on the upper board, while control circuitry is placed on the lower board to use vertical space instead of horizontal area. This configuration produces a bounding-box volume of 0.357 L, corresponding to a power density of 2.80 kW/L.

2.5 Preliminary Results

EMI Filter (Grid → Totem Pole PFC)

Table 1: Key calculated parameters for the EMI filter.

Parameter	Value	Notes
Input Voltage	120V/230V AC, 50/60Hz	Universal input
Output Voltage	120V/230V AC, 50/60Hz	Same as input
Power Rating	1 kW continuous	Full load
Worst-Case current (120V)	I_{RMS} = 8.33A	Constantly changes

Table 2: Calculated EMI filter power losses.

Component	120V: Loss @ 1kW (W)	120V: Loss @ 500 W (W)	120V: Loss @ 100 W (W)	230V: Loss @ 1kW (W)	230V: Loss @ 500 W (W)	230V: Loss @ 100 W (W)
Inductor Power Loss	19.513	4.879	0.728	6.82	2.82	1.552
Capacitor Power Loss	0.00145	0.00145	0.00145	0.00145	0.00145	0.00145
Resistor Power Loss	0.0095	0.0095	0.0095	0.0095	0.0095	0.0095

EMI Filter Total	**19.6**	**4.9**	**0.74**	**6.83**	**2.83**	**1.56**

STAGE 1: Totem Pole PFC (AC → 400V DC)

Table 3: Key calculated parameters for the totem pole PFC circuit.

Parameter	**Value**	**Notes**
Input Voltage	120V/230V AC, 50/60Hz	Universal input
Output Voltage	400V DC regulated	DC bus voltage
Power Rating	1 kW continuous	Full load
Worst-Case current (120V)	I_{RMS} = 9.15A, I_{peak} = 12.94A	Design driver
Boost Inductor	L = 470 µH, $I_{sat} \geq$ 18A, DCR < 40mΩ	22-27% ripple
Fast MOFSETs (Q1, Q2)	650V, 30A, 50mΩ	I_{RMS} = 6.94A
Slow MOFSETs (Q3, Q4)	900V, 31A, 30mΩ	I_{RMS} = 6.47 A
DC Link Capacitor	Film + ceramic, ~40-50µF, 450V	Voltage ripple < 5%
PFC Stage Efficiency	97.0% | 96.5% | 88.7%	1 kW | 500 W | 100 W

Table 4: Calculated PFC system power losses.

Component	**120V: Loss @ 1kW (W)**	**120V: Loss @ 500 W (W)**	**120V: Loss @ 100 W (W)**	**230V: Loss @ 1kW (W)**	**230V: Loss @ 500 W (W)**	**230V: Loss @ 100 W (W)**
Fast MOFSETs (Q1, Q2)	12.9	4.9	0.72	8.14	3.69	0.68
Slow MOFSETs (Q3, Q4)	3.8	0.95	0.04	0.93	0.23	0.009
Inductor (Cu + Core)	5.5	2.8	2.0	2.82	2.21	2.01
Capacitors	1.5	0.38	0.02	0.37	0.09	0.004
Gate Drivers	0.4	0.4	0.4	0.4	0.4	0.4
Other (PCB, control)	3.5	3.5	3.5	3.5	3.5	3.5
PFC Total	**33.6**	**18.4**	**12.7**	**16.2**	**10.1**	**6.6**

STAGE 2: Dual Active Bridge (400V DC → 300-450V Battery)

Table 5: Key calculated parameters for the DAB circuit.

Parameter	Value	Notes
Input Voltage	400 V DC	From PFC stage
Output Voltage	350-450 V DC	Battery voltage range
Power Rating	1 kW continuous	Full load
Transformer Ratio	1:1	Simplifies sourcing
Leakage Inductance	25-35 µH	Power transfer element
Magnetizing Inductance	>500 µH (prefer >1000 µH)	Minimize magnetizing current
Transformer Core	ETD44/ETD49, N87/N97 ferrite	100 kHz operation
Primary Current	I_{RMS} = 2.5A, I_{peak} = 4A	Nominal at 375V battery
Secondary Current	I_{RMS} = 2.67A, I_{peak} = 5A	Nominal at 375V battery
All MOSFETs	GS66508T: 650V, 30A, 50mΩ	8 total devices
Input/Output Caps	~40µF each (film + ceramic)	Voltage ripple management
DAB Stage Efficiency	98.2% | 98.0% | 94.6%	1 kW | 500 W | 100 W

Table 6: Calculated DAB system power losses.

Component	Loss @ 1kW (W)	Loss @ 500 W (W)	Loss @ 100 W
Conduction (Primary)	1.36	0.34	0.01
Conduction (Secondary)	1.68	0.42	0.02
Switching (partial ZVS)	8.8	4.4	0.88
Transformer	4.0	3.3	3.0
Gate Drivers	1.8	1.8	1.8
Capacitors	0.5	0.13	0.01
DAB Total	**18.1**	**10.4**	**5.7**

Table 7: Key Calculated System Efficiency Parameters

Load	η @ 120 V	η @ 230 V
1000W	93.34%	96.05%
500W	93.69%	95.54%
100W	83.94%	87.83%

Table 8: Estimated bill of materials with prices for the production of both individual and bulk units.

Item	Source	Quantity	Unit Price	Total Price (1000 Units)	Total Price
Totem-Pole PFC:					
Inductor	ITG Electronics	2	$15.00	$30,000.00	$30.00
Output Capacitor	Digikey	1	$12.74	$12,740.00	$12.74
C3M0065100K (Fast-Switching) MOSFETs	Digikey	2	$24.39	$48,780.00	$48.78
C3M0032120K (Slow-Switching) MOSFETs	Digikey	2	$22.21	$44,420.00	$44.42
DC Link:					
Input Capacitors	Mouser	2	$5.14	$10,280.00	$10.28
Output Capacitors	Mouser	2	$6.22	$12,440.00	$12.44
Bi-directional DC-DC:					
HF Transformer	Würth Elektronik (Custom)	1	$90.00	$90,000.00	$90.00
GS66508T-MR (Primary Side) GaNFETs	Mouser	4	$16.07	$64,280.00	$64.28
GS66508T-MR (Secondary Side) GaNFETs	Mouser	4	$16.07	$64,280.00	$64.28
Microcontroller:					
STM32G474RET6 MCU	Arrow	1	$4.32	$4,320.00	$4.32
Cooling:					
Heatsinks(Aluminum Tracks/blocks)	Digikey	3	$8.69	$26,070.00	$26.07
EMI Filter:					
Inductor Invertor Side	Mouser	1	$7.34	$7,340.00	$7.34
Inductor Grid Side	Mouser	1	$16.00	$16,000.00	$16.00
Capacitor	Digikey	2	$0.53	$1,060.00	$1.06
Resistor	Mouser	1	$3.43	$3,430.00	3.43
Sensors:					
Current Sensor	TI	2	$1.27	$2,530.00	$2.53
Resistor Top For DC Resistor Divider	Mouser	4	$0.14	$560.00	$0.56
Resistor Top For AC Resistor Divider	Mouser	4	$0.15	$600.00	$0.60
Resistor Bottom for both AC and DC Resistor Divider	Mouser	2	$3.50	$7,000.00	$7.00
Voltage IC Sensor	TI	2	$2.07	$4,140.00	$4.14
Temperature Sensors	Online Sensors	1	$6.00	$6,000.00	$6.00
Over Current and Voltage Protection:					
AC Relay	RS	1	$17.72	$17,720.00	$17.72
NPN to drive AC Relay	Digikey	1	$0.07	$70.00	$0.07
Resistor between NPN and Comparator	Mouser	1	$0.16	$160.00	$0.16
Comparator for both AC and DC	TI	2	$0.95	$1,900.00	$1.90
DC IC MOSFET driver	Digikey	1	$1.36	$1,360.00	$1.36
DC N-MOSFETS	Digikey	2	$12.14	$24,280.00	$24.28
Fuse before battery	Mouser	1	$2.34	$2,340.00	$2.34
Soft Start:					
Precharge Resistor	Digikey	5	$0.27	$1,350.00	$1.35
Precharge Relay	Digikey	1	$37.25	$37,250.00	$37.25
Capacitor	Mouser	2	$3.79	$7,580.00	$7.58
NPN to drive Relay	Digikey	1	$0.07	$70.00	$0.07
Resistor between NPN and Comparator	Mouser	1	$0.16	$160.00	$0.16
Miscellaneous:					
PCB	Lusher Engineering Services (Custom)	1	$10.00	$10,000.00	$10.00
Wiring (~20ft)	DigiKey	1	$11.99	$11,990.00	$11.99
AC Input Connector	Digikey	1	$7.01	$7,010.00	$7.01
Board-to-Board Connector	TestEquity	1	$0.36	$360.00	$0.36
Sensor Connectors	Mouser	3	$0.50	$1,500.00	$1.50
DC Input	Digikey	2	$0.22	$4,400.00	$0.44
			Totals:	**$585,770.00**	**$581.81**

3. Preliminary Work Plan

Shown below is a Gantt chart to outline the major tasks and milestones for this project from its initiation through March. Each phase is organized with clear weekly objectives to track progress efficiently and ensure a smooth transition from the design stage to the build stage and testing of a fully functional bidirectional charger prototype.

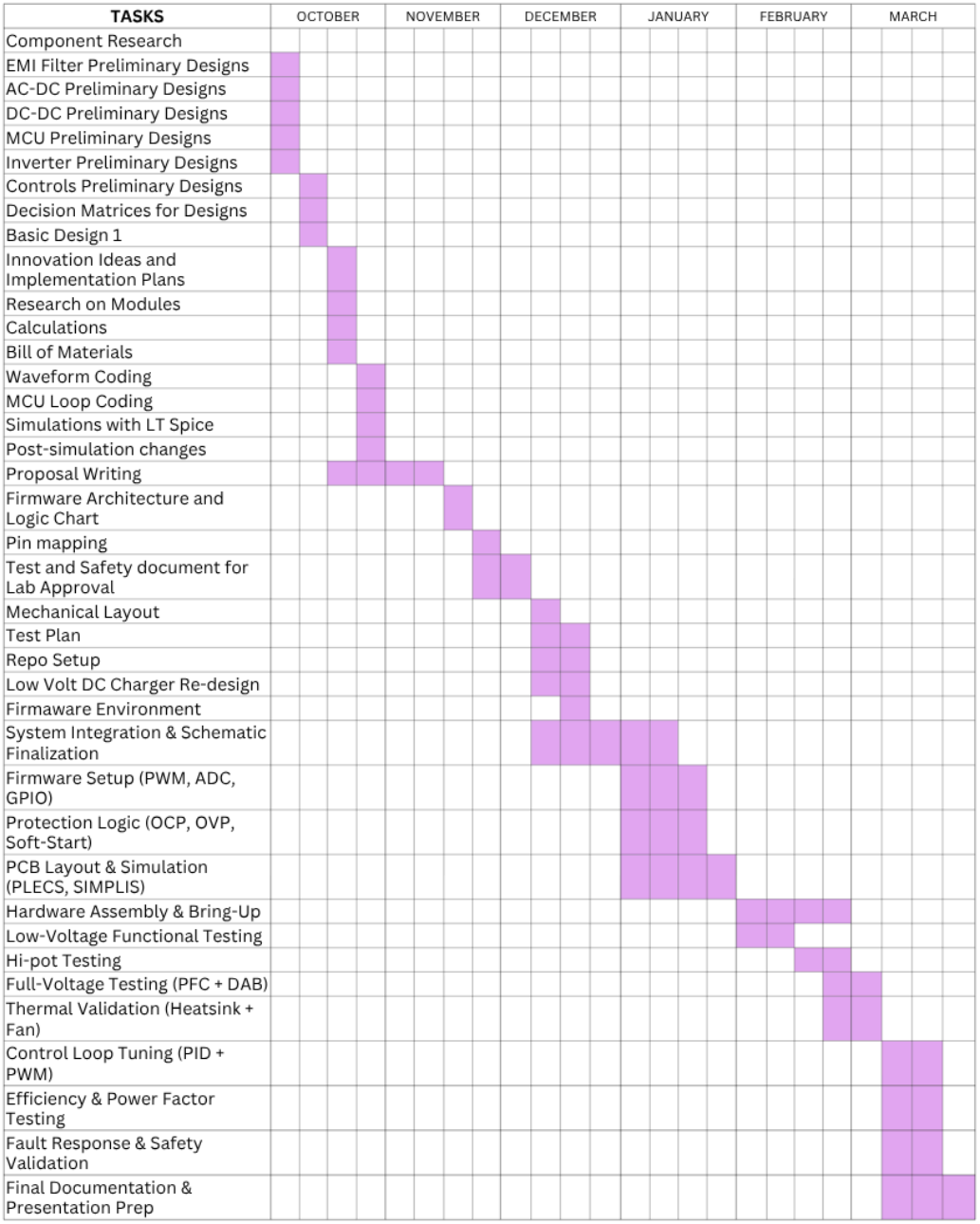

Figure 3: Gantt chart outlining the timeline of major project milestones.

Figure 4: Traceability matrix for design deliverables in terms of competition standards.

	A	B	C
1	**Requirement**	**Status**	**Our Design**
2	Operation on 230 V AC (50 Hz) and 120 V AC (60 Hz) single-phase grid	Done	Universal input tested
3	Output 300–450 V DC during charging mode	Done	400 V DC regulated, tested
4	Galvanic isolation (≥ 1.5 kVAC hi-pot)	Done	1.5 kVAC high-frequency transformer isolation
5	Maximum output power of 1 kW	Done	1 kW continuous
6	Low-cost converter / manufacturability	Done	Cost-optimized PCB, BOM
7	High efficiency > 92 % peak	Done	96.05% (calculated)
8	High power density > 2 kW/L (including filters & cooling)	Done	2.8 kW/L (including cooling)
9	Soft start or pre-charge logic	Done	MCU-controlled soft start
10	Natural convection or self-supplied forced-air cooling	Done	Aluminum heatsink, forced air
11	Single 12 V DC auxiliary supply for electronics	Done	External 12 V
12	Overvoltage and overcurrent protection (OVP/OCP)	Done	Hardware & firmware based OVP/OCP
13	AC-side fusing (≤15A @ 230V)	Done	15A AC fuse
14	Connector compatibility (FCR series)	Done	FCR-compatible interfaces
15	Safety container / open-frame converter	Done	In accordance
16	No real battery used during testing	Done	Simulated battery
17	Bidirectional operation (V2L/V2G, 120 & 230 V)	Done	Bidirectional control & topology
18	High efficiency over load range (>92%@1kW, >80%@100W)	Done	96.05% @ 1kW, >80% @ 100W
19	Power factor correction (PF ≥ 0.96, THD < 5%)	Done	PF 0.99, THD < 5%
20	Electromagnetic compliance (EMC)	Done	EMI filter, pre-compliance results
21	Plug-and-play / automatic operation	Done	Automatic MCU operation
22	Integrated LVDC charger (12V or 48V @500W)	In Progress	Not yet implemented, redesigning

4. Summary

Our design for the IFEC 2026 challenge delivers high efficiency (96.05%, best-case) and a high power density of 2.8 kW per liter, placing it well beyond most commercial Level 1 and Level 2 chargers, which typically offer lower efficiency and larger size. In addition, our charger is on par with all essential industry standards for power quality, user convenience, galvanic isolation, power factor correction (PFC), and total harmonic distortion (THD) control. Our estimated cost of around $580 for a 1 kW bidirectional onboard charger aligns well with market pricing while delivering significantly more advanced technology (Table 8). While most commercial OBCs at this scale rely on SiC MOSFETs, our design uses GaN-based Totem-Pole PFC, high-frequency bidirectional isolation, and a compact two-PCB architecture with higher power density than existing products. These improvements increase full-load efficiency and reduce wasted energy, meaning users spend less on electricity over the lifetime of the vehicle.In effect, far less of the purchased energy is dissipated as heat, dramatically lowering thermal losses and improving overall operating efficiency. As we continue refining the design and evaluating additional suppliers, further cost reductions are expected, strengthening the value of the proposed solution even more.

5. Bibliography

[1] H. Temiz, E. Demirok, O. Keysan, A. Türkay, and B. Çetinkaya, "Performance comparison of passive series R and shunt R-C damped LCL filter for grid-connected inverters," *The Journal of Engineering*, vol. 2019, no. 18, pp. 4698–4702, Jun. 2019, doi: 10.1049/joe.2018.9321.

[2] Texas Instruments, "Increased Accuracy and Performance with Integrated High Voltage Resistor Isolated Amplifiers and Modulators (Rev. A)," *Texas Instruments*. Oct. 2024. Available: https://www.ti.com/lit/an/sbaa646a/sbaa646a.pdf

[3] M. Crescentini, S. F. Syeda, and G. P. Gibiino, "Hall-Effect Current Sensors: Principles of Operation and Implementation Techniques," *IEEE Sensors Journal*, vol. 22, no. 11, pp. 10137–10151, Jun. 2022, doi: 10.1109/jsen.2021.3119766.

[4] D. Bisi, "GaN Bidirectional Switches: The Revolution is Here," *IEEE Power Electronics Magazine*, vol. 12, no. 1, pp. 29–36, Feb. 2025, doi: 10.1109/mpel.2024.3522985.

[5] J.-H. Teng and B.-H. Liu, "Three-Stage Dead-Time Adjustment Scheme for Conversion Efficiency Enhancement of Phase-Shift Full-Bridge Converters at Light Loads," *IEEE Transactions on Industrial Electronics*, vol. 68, no. 2, pp. 1210–1219, Feb. 2021, doi: 10.1109/tie.2020.2970632.

[6] K. Satterlee, "Charging Forward: The Impact of Electrifying Heavy-Duty Vehicles on the Grid," Texas A&M University Engineering. Accessed: Nov. 14, 2025. [Online]. Available: https://engineering.tamu.edu/news/2024/12/charging-forward-the-impact-of-electrifying-heavy-duty-vehicles-on-the-grid.html

[7] I. E. Ebere, A. A. Khan, S. Ogundahunsi, E. Ugwuemeaju, U. A. Khan, and S. Ahmed, "Design and Optimization of the Heatsink of a Level 1 Electric Vehicle Charger," *Energies*, vol. 18, no. 1, Jan. 2025, doi: 10.3390/en18010180.

[8] Q. Huang and A. Q. Huang, “Review of GaN Totem-Pole Bridgeless PFC,” *CPSS Transactions on Power Electronics and Applications*, vol. 2, no. 3, pp. 187–196, Sep. 2017, doi: 10.24295/cpsstpea.2017.00018.

[9] Z. Li, “Development of Flexible Temperature Sensors for EV (Electric Vehicle) Batteries,” University of Windsor, 2024. Accessed: Nov. 12, 2025. [Online]. Available: https://www.proquest.com/docview/2919970034?pq-origsite=gscholar&fromopenview=true&sourcetype=Dissertations%20&%20Theses

[10] M.-H. Chen and C.-D. Ngo, “Digital Control of a Bidirectional Resonant Converter for Electric Vehicle Applications with Enhanced Transient Response,” *Electronics*, vol. 14, no. 16, Aug. 2025, doi: 10.3390/electronics14163202.

[11] M. Hosseini, “Unraveling the Power of Microcontrollers: The Heart of Modern Electronics - Arshon Inc. Blog,” Arshon Inc. Blog - We offer complete end-to-end electronic design and manufacturing services. [Online]. Available: https://arshon.com/blog/unraveling-the-power-of-microcontrollers-the-heart-of-modern-electronics/

[12]“Placement and Capacity of EV Charging Stations.” Accessed: Nov. 15, 2025. [Online]. Available: https://www.tamug.edu/cares/news/placement-capacity-ev-charging.html

[13] Texas A&M University, “ECEN - Electrical & Comp Engr (ECEN),” Texas A&M Catalogs < Texas A&M University, College Station, TX. Accessed: Nov. 14, 2025. [Online]. Available: https://catalog.tamu.edu/undergraduate/course-descriptions/ecen/

[14] Texas A&M University, “ENGY - Energy,” Texas A&M Catalogs < Texas A&M University, College Station, TX. Accessed: Nov. 14, 2025. [Online]. Available: https://catalog.tamu.edu/graduate/course-descriptions/engy/