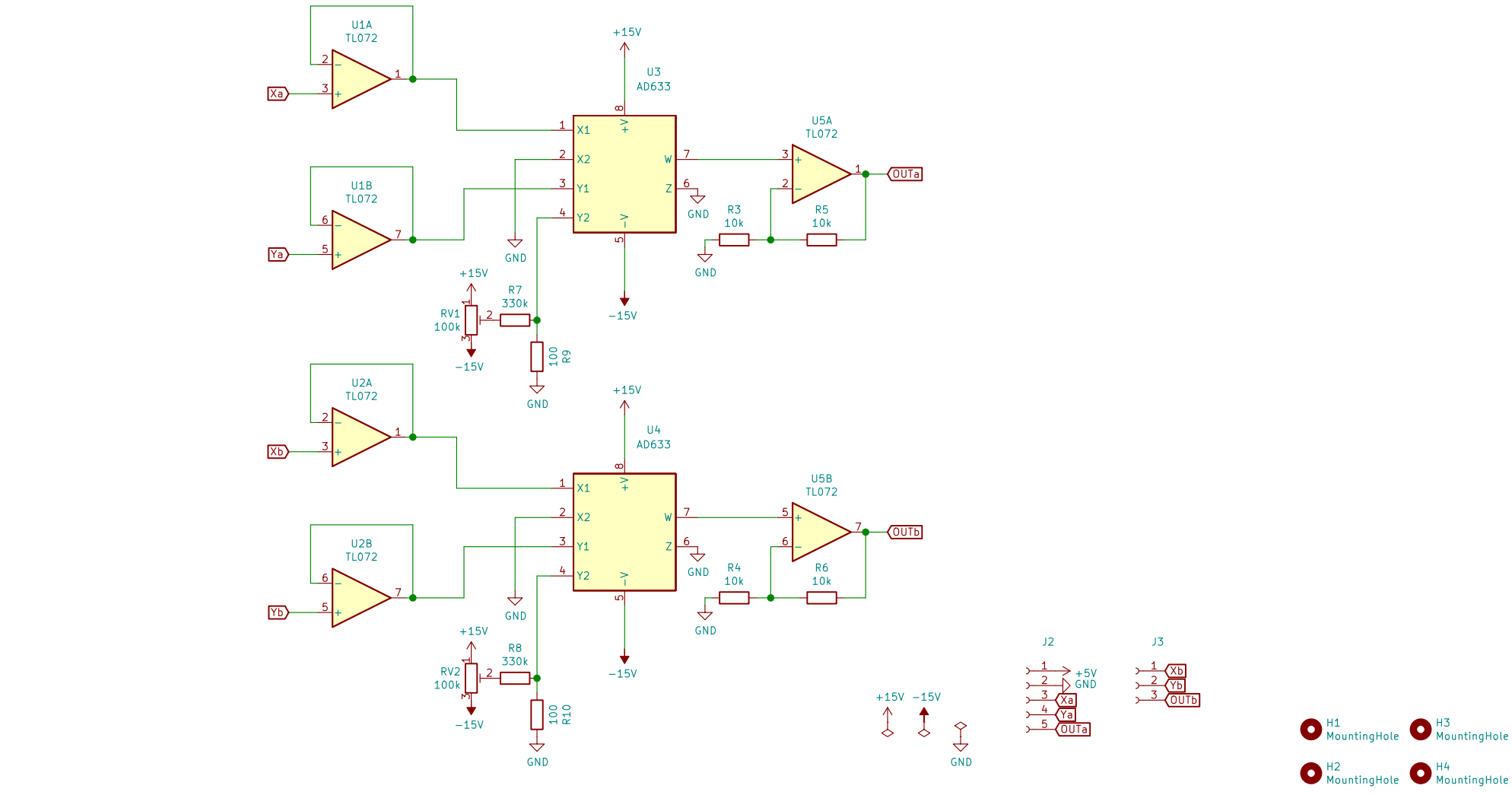

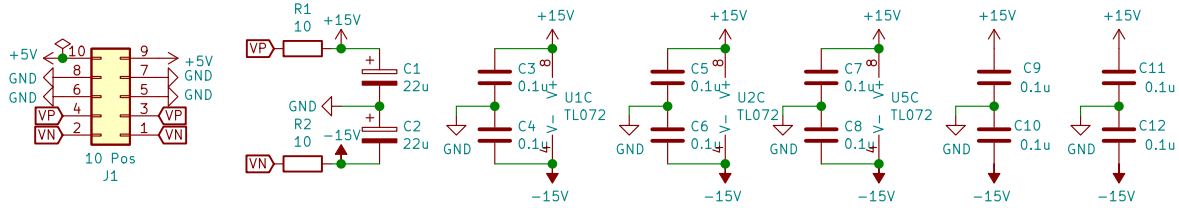

License CC BY 4.0 – Attribution 4.0 International

vca and ringmodulator
schema for main pcb

Sheet: /
File: main.sch

Title: produkt

Size: A4	Date: 2021-07-28	**Rev: R01**
KiCad E.D.A. eeschema 5.1.6+dfsg1-1		Id: 1/1