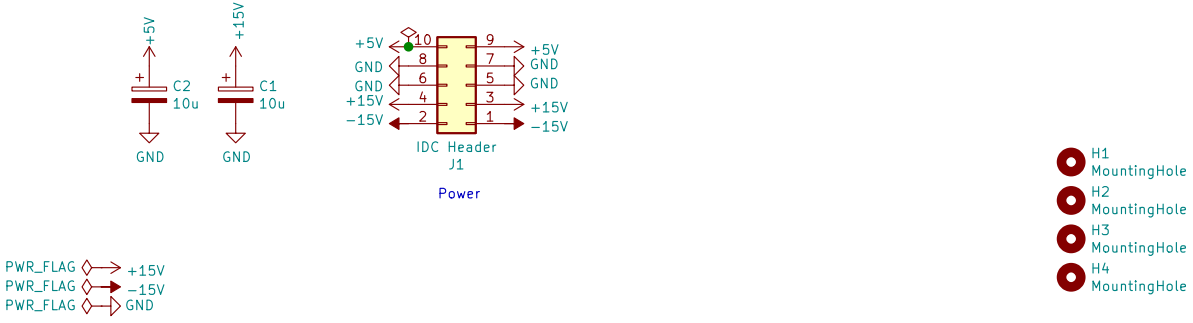


License CC BY 4.0 – Attribution 4.0 International

Schema for main circuit
midi to cv interface

Sheet: /
File: main.sch

**Title: kontakt**

| | | |
|---|---|---|
| Size: A4 | Date: 2020-05-10 | **Rev: 01** |
| KiCad E.D.A. eeschema 5.1.6+dfsg1-1 | | Id: 1/3 |

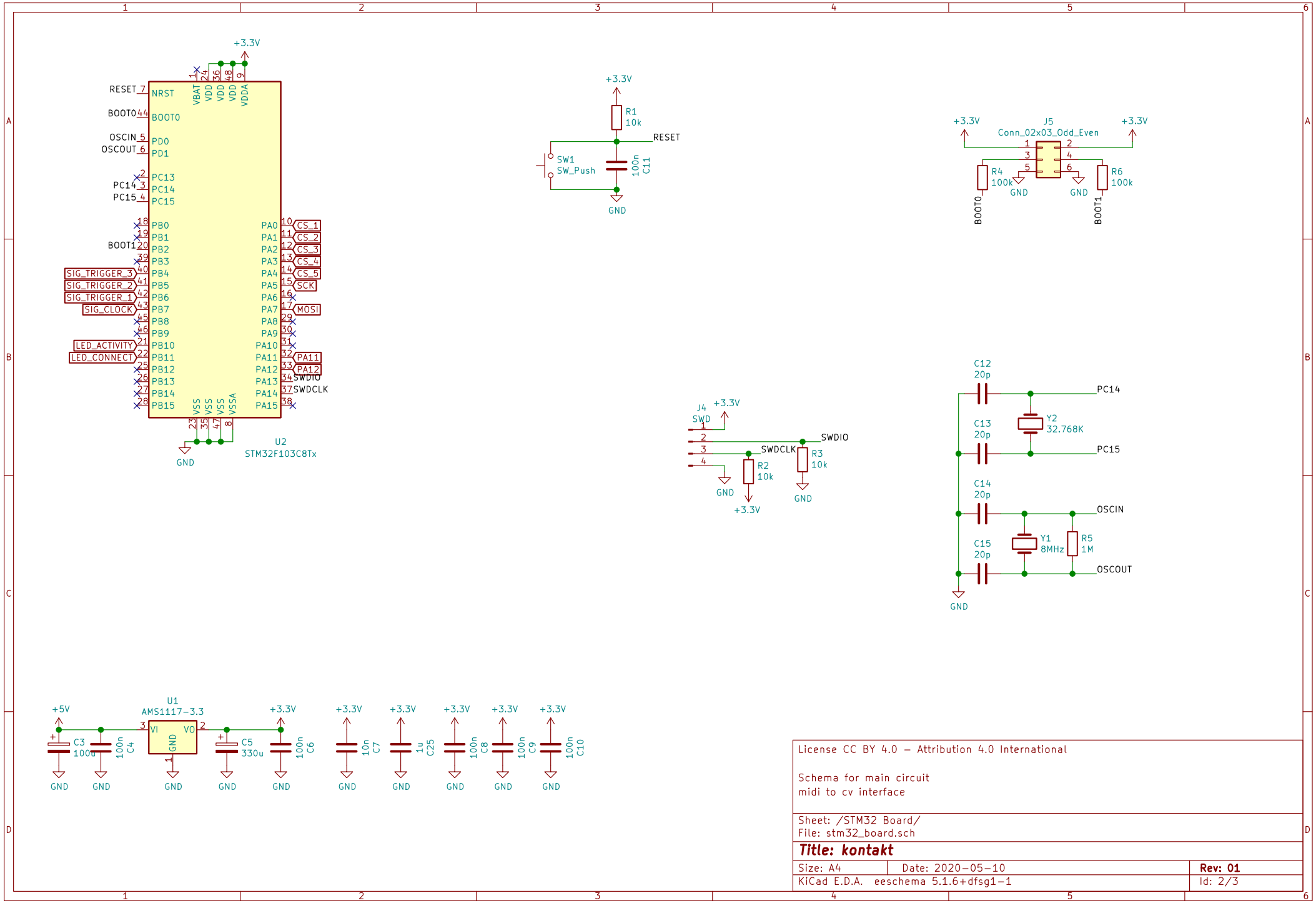


License CC BY 4.0 – Attribution 4.0 International

Schema for main circuit
midi to cv interface

Sheet: /STM32 Board/
File: stm32_board.sch

**Title: kontakt**

| | | |
|---|---|---|
| Size: A4 | Date: 2020-05-10 | Rev: 01 |
| KiCad E.D.A. eeschema 5.1.6+dfsg1-1 | | Id: 2/3 |

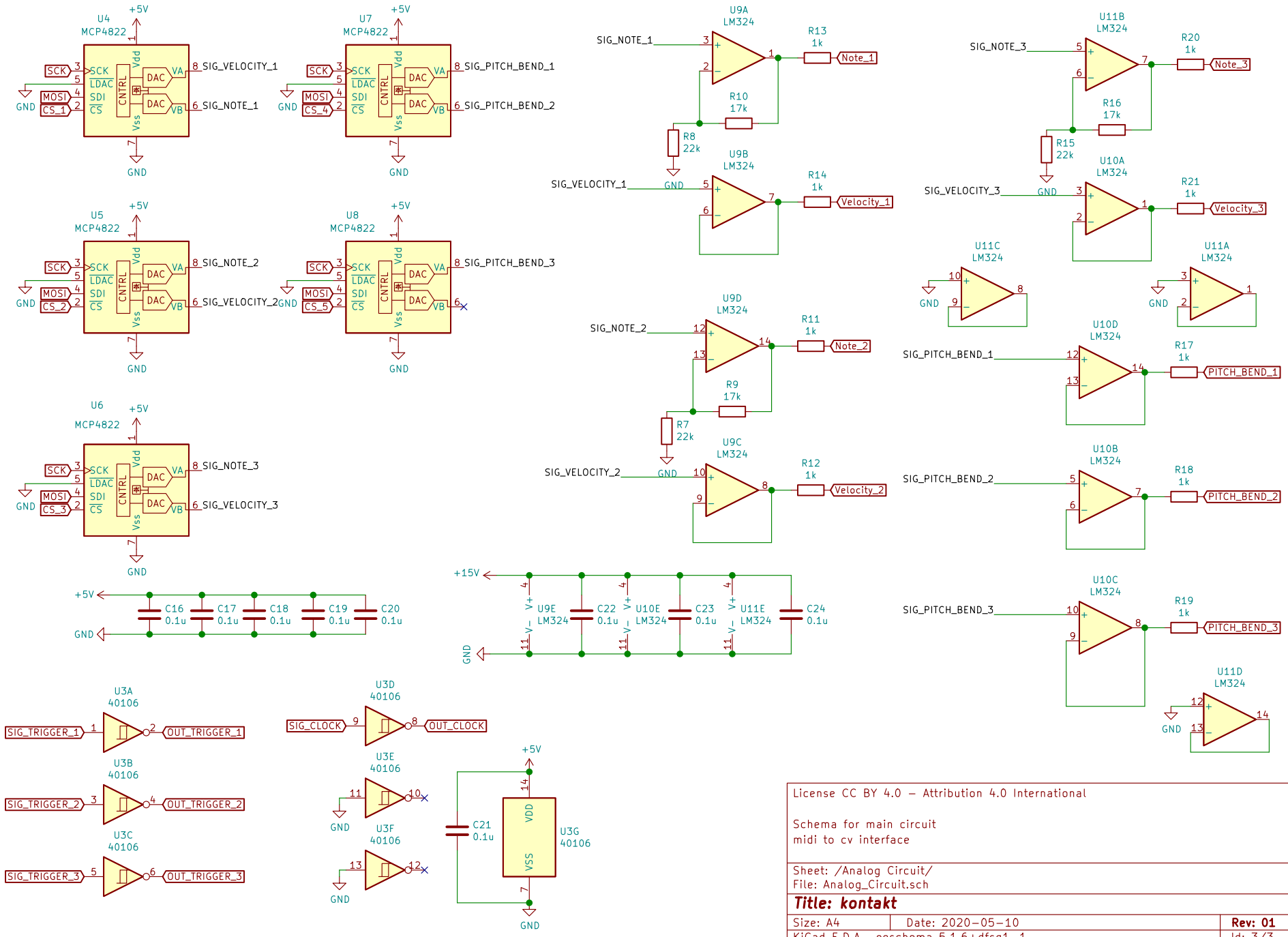


License CC BY 4.0 – Attribution 4.0 International

Schema for main circuit
midi to cv interface

Sheet: /Analog Circuit/
File: Analog_Circuit.sch

**Title: kontakt**

| | | |
|---|---|---|
| Size: A4 | Date: 2020-05-10 | Rev: 01 |
| KiCad E.D.A. eeschema 5.1.6+dfsg1-1 | | Id: 3/3 |