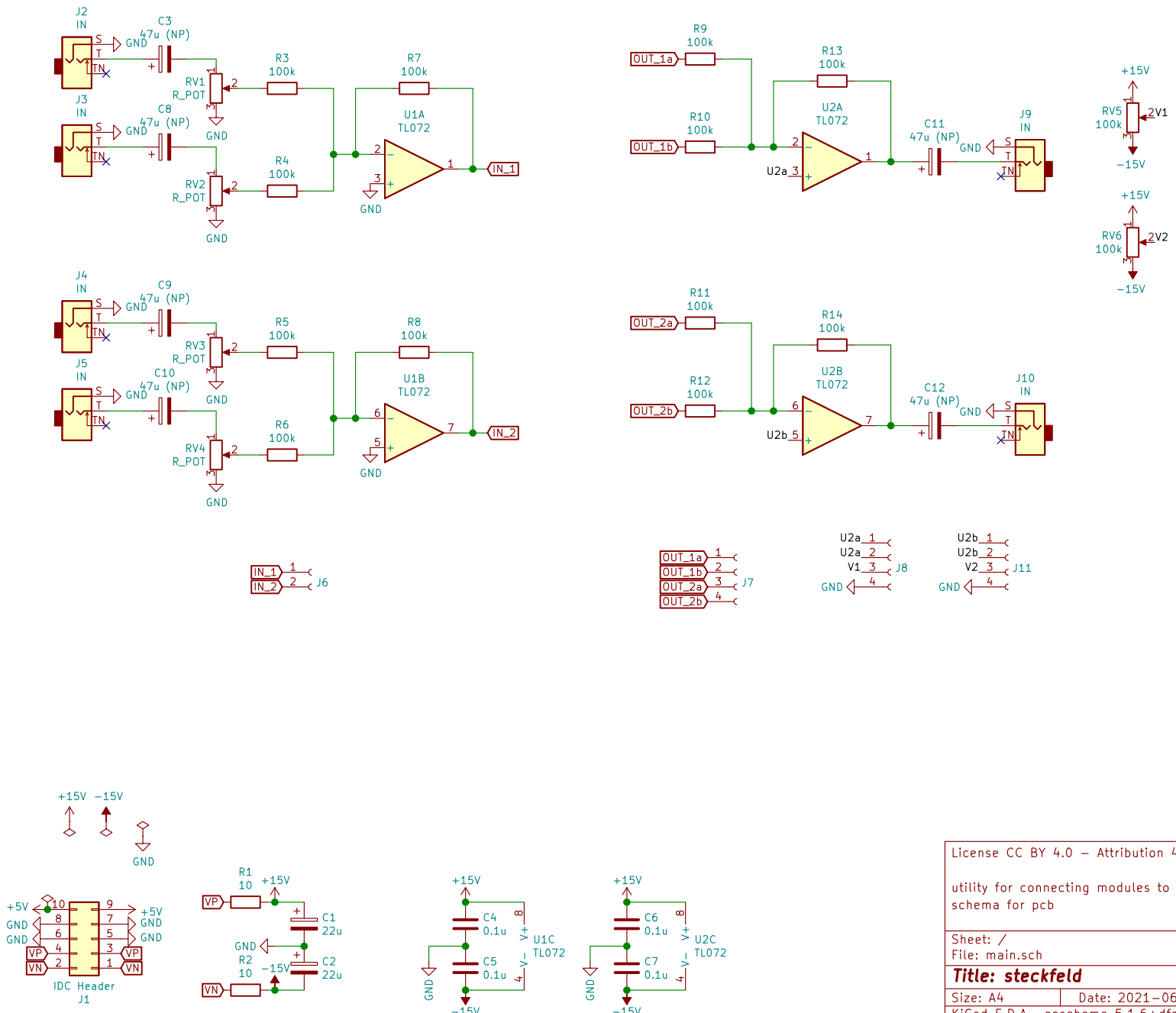

License CC BY 4.0 – Attribution 4.0 International

utility for connecting modules to breadboard
schema for pcb

Sheet: /
File: main.sch

Title: steckfeld

Size: A4	Date: 2021-06-13	Rev: R01
KiCad E.D.A. eeschema 5.1.6+dfsg1-1		Id: 1/1