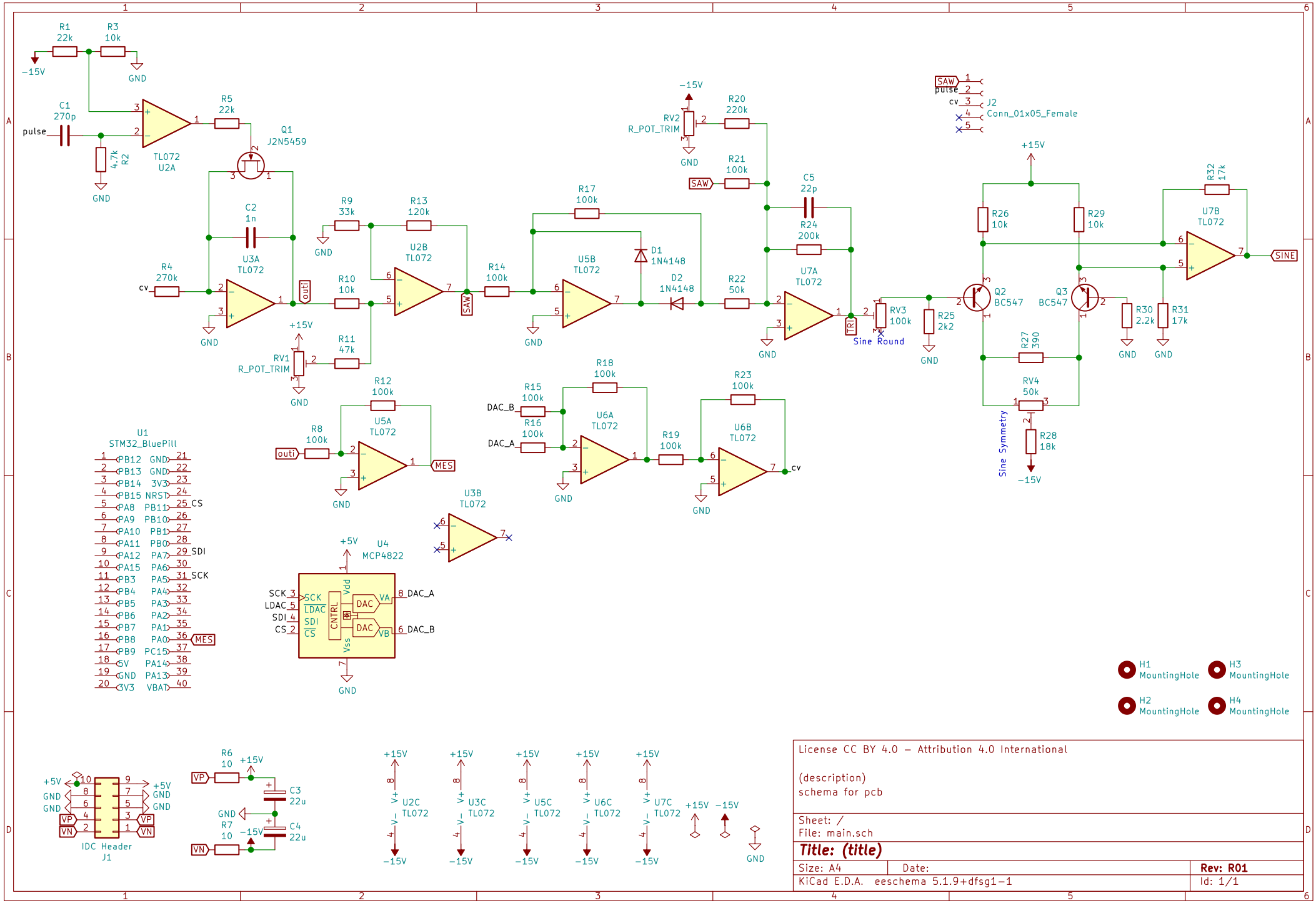

License CC BY 4.0 – Attribution 4.0 International

(description)
schema for pcb

Sheet: /
File: main.sch

Title: (title)

Size: A4	Date:	Rev: R01
KiCad E.D.A. eeschema 5.1.9+dfsg1-1		Id: 1/1