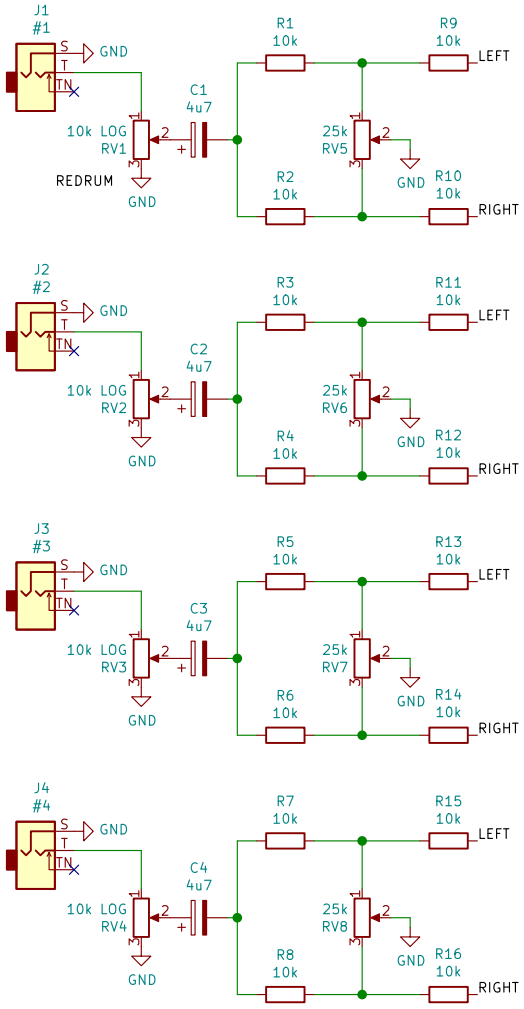


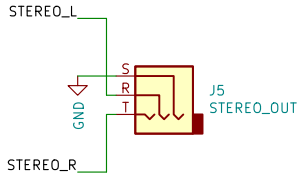


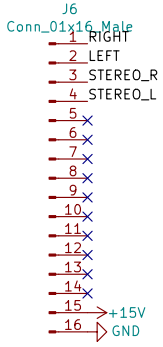


License CC BY 4.0 – Attribution 4.0 International

(description)
schema for pcb

Sheet: /
File: mount.sch

**Title: (title)**

| | | |
|---|---|---|
| Size: A4 | Date: | **Rev: R01** |
| KiCad E.D.A. eeschema 5.1.9+dfsg1-1 | | Id: 1/1 |