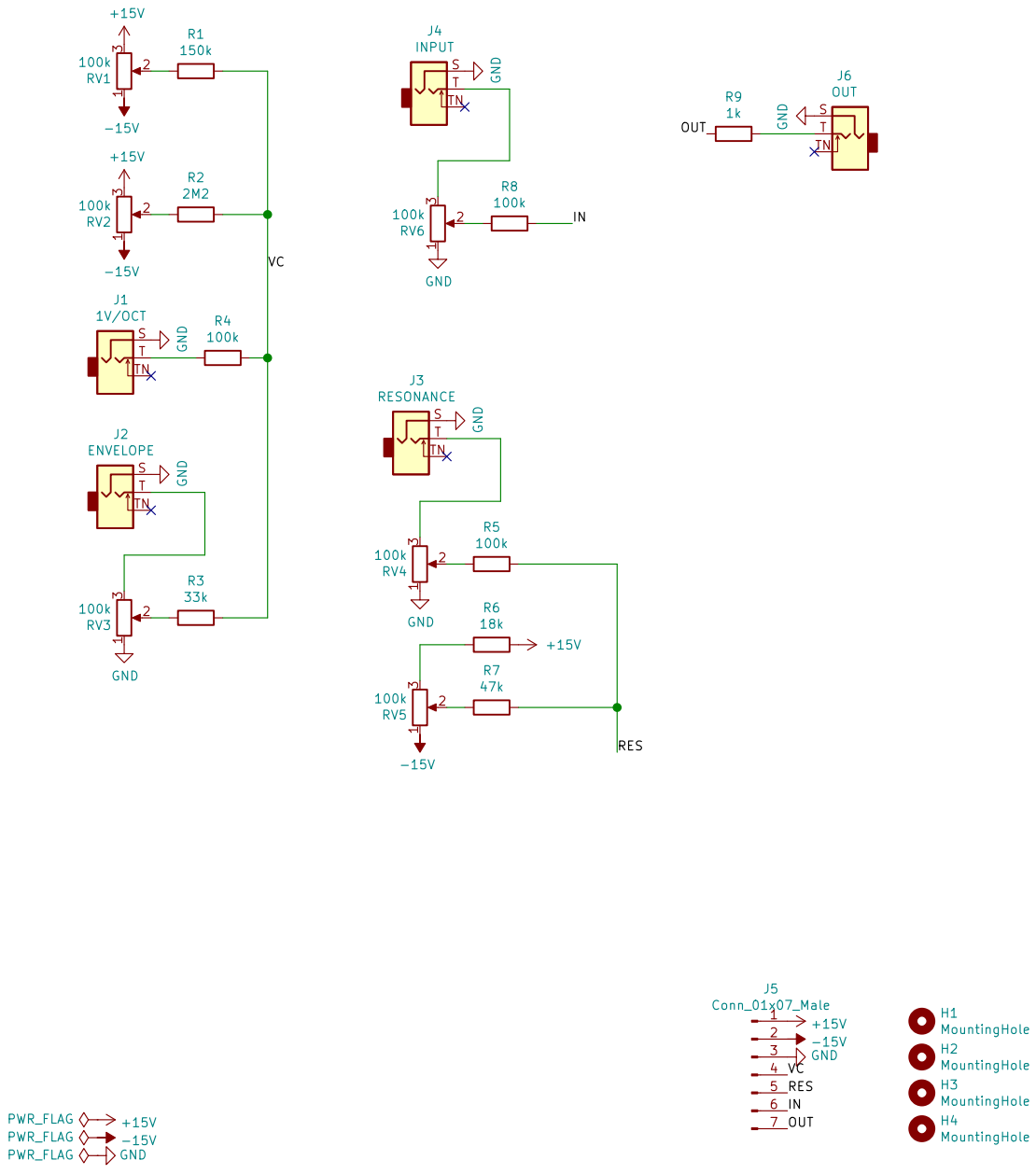

License CC BY 4.0 – Attribution 4.0 International

Schema for mount circuit
SSM2040 VCF

Sheet: /
File: mount.sch

Title: VCF

Size: A4	Date: 2019-12-27	**Rev: R01**
KiCad E.D.A. eeschema 5.1.9+dfsg1-1		Id: 1/1