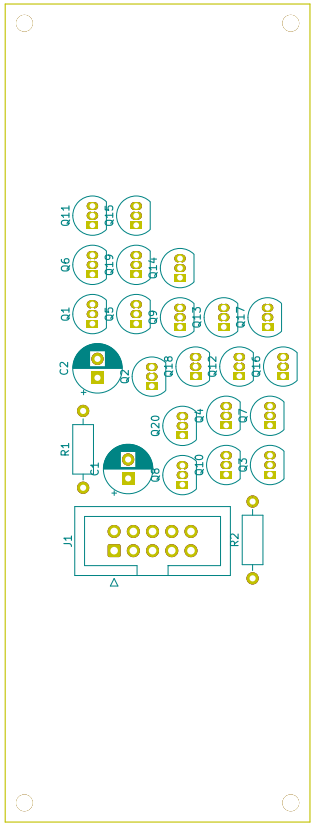

License CC BY 4.0 – Attribution 4.0 International

(description)
PCB for panel

Sheet:
File: tmpo37j7vg0.kicad_pcb

Title: (title)

Size: A4	Date:	Rev:
KiCad E.D.A. pcbnew 5.1.9+dfsg1-1		Id: 1/1