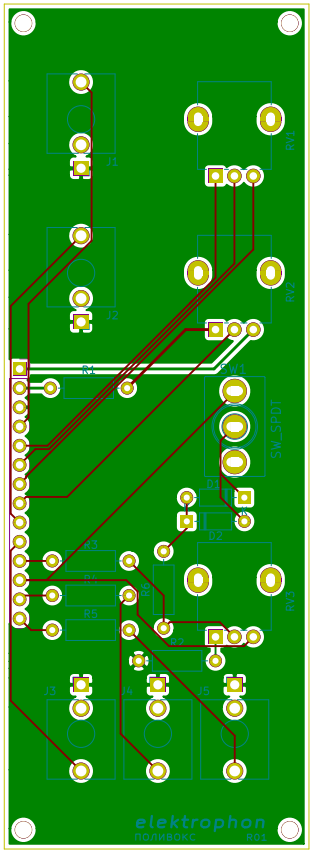

License CC BY 4.0 – Attribution 4.0 International

schema for mount circuit
PCB for mount circuit

Sheet:
File: tmprohnd0gb.kicad_pcb

Title: ПОЛИВОКС

Size: A4	Date: 2020-06-01	Rev: 01
KiCad E.D.A. pcbnew 5.1.6+dfsg1-1		Id: 1/1