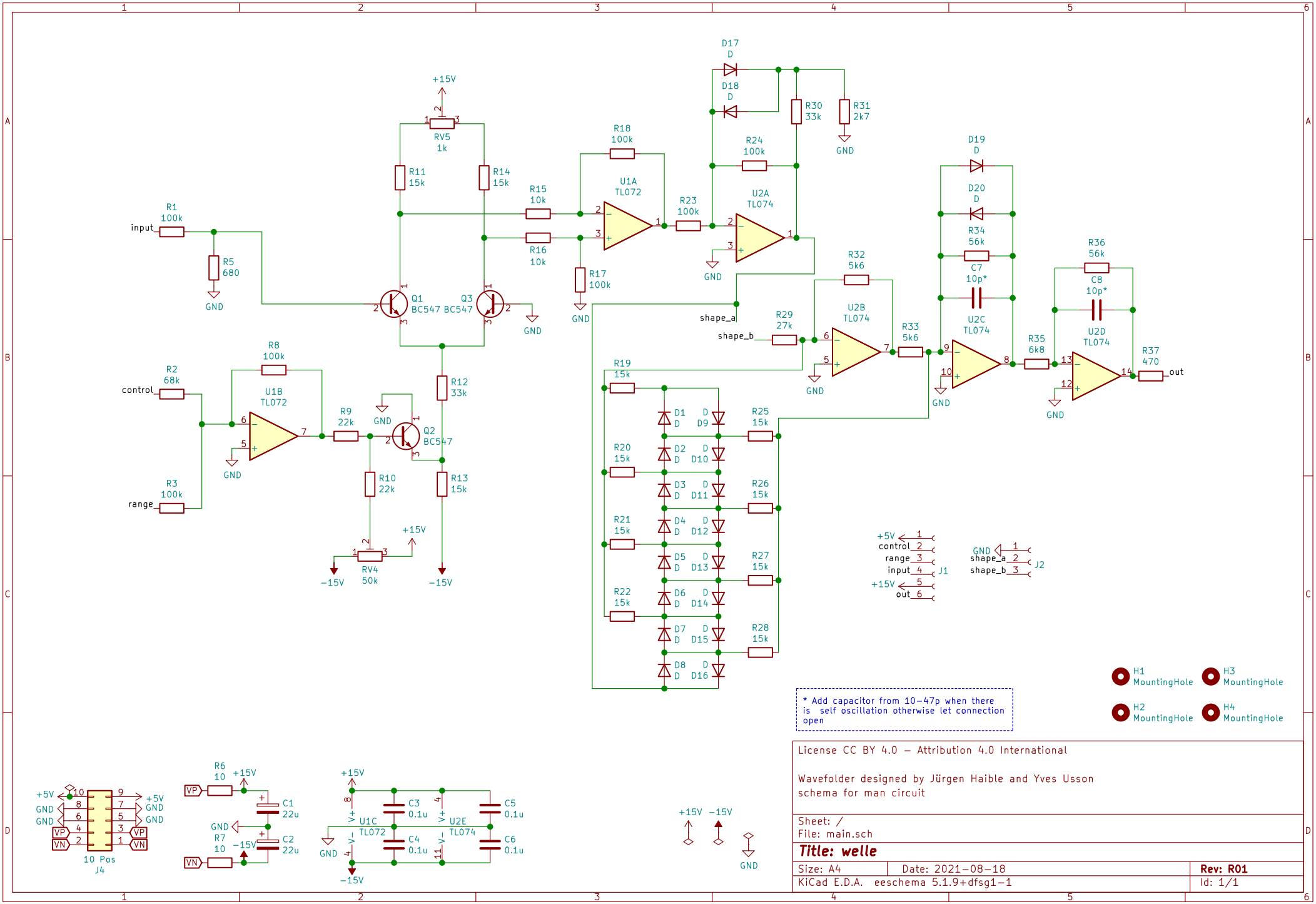

License CC BY 4.0 – Attribution 4.0 International

Wavefolder designed by Jürgen Haible and Yves Usson
schema for man circuit

Sheet: /
File: main.sch

Title: welle

Size: A4	Date: 2021-08-18	Rev: R01
KiCad E.D.A. eeschema 5.1.9+dfsg1-1		Id: 1/1