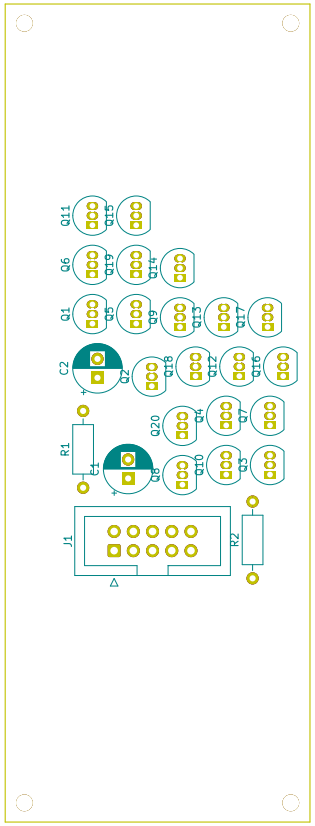

License CC BY 4.0 – Attribution 4.0 International

(description)
PCB for panel

Sheet:
File: tmp6jtxx5_o.kicad_pcb

Title: (title)

Size: A4	Date:	**Rev:**
KiCad E.D.A. pcbnew 5.1.9+dfsg1-1		Id: 1/1