Connectome-Constrained Spiking Networks Reproduce Emergent Computations in Larval Olfactory Pathway

Anonymous Author(s)

Abstract

The complete synaptic connectome of the larval *Drosophila melanogaster* brain offers an opportunity to build structurally faithful neural circuit models. However, the connectome provides only the wiring diagram, not the biophysical dynamics or functional logic underlying neural computation; one approach to bridging this gap is supervised training on a biologically relevant task, evaluating the resulting neural activity against existing data. Here we present a spiking neural network model of the larval olfactory pathway, from odor receptors via the antennal lobe to Kenyon cell activation in the mushroom body. All connectivity is fixed by the connectome, complemented by biologically plausible neuron dynamics including spiking and non-spiking neurons, two-compartment KCs, gap junctions, synaptic depression, and axo-axonic connections, yet requiring only 449 trainable parameters. The model is trained on a 28-odor classification task using electrophysiological odor receptor response data as input. We use two-phase ANN-to-SNN transfer learning: a rate-based teacher is trained to convergence, then its weights are transferred to the spiking network and fine-tuned with surrogate gradient descent under full biophysical constraints for accuracy and realistic KC activation sparsity. The trained model spontaneously reproduces decorrelation localized to the mushroom body, APL suppression of KC activity by about half, concentration-invariant gain control across a 17-fold concentration range, and sub-additive KC recruitment of odor mixtures matching experimental observations. An ensemble of independently trained models converges to consistent KC representations and parameters, demonstrating that the connectome dominates the learned solutions. Additionally, systematic ablation of circuit components reveals their individual contributions and generates experimentally testable hypotheses. We demonstrate that the connectome, combined with biophysical constraints and a simple learning objective, produces circuit-level computations matching independent biological measurements. This establishes a generalizable methodology beyond larval olfaction for translating connectome data into testable spiking models to determine microcircuit functional logic and the roles of constituent neurons.[1]

Introduction

Recent advances in electron microscopy (EM) have delivered a revolution in connectomics. The annotation of 3,016 neurons and 548,000 synapses in the complete EM reconstruction of the larval *Drosophila melanogaster* brain (Winding et al., 2023) was quickly followed by the full adult *Drosophila* brain reconstruction describing 5×10^7 chemical synapses between 139,255 neurons (Dorkenwald et al., 2024; Schlegel et al., 2024), representing the most comprehensive wiring diagram of any animal brain to date. However, a wiring diagram is not a circuit model. These connectomes do not directly reveal the computations a circuit performs, the dynamics it produces, or the behaviors it generates.

There are two clear challenges to developing a methodology that maximally exploits the latent information in this data. First, connectomes provide connectivity but lack biophysical details, such as membrane time constants, spike thresholds, synaptic strengths in physiological units, gap junction conductances, or short-term plasticity parameters. These must be inferred, estimated, or learned as part of any methodology developing connectome data into a computational model. Second, the scale and complexity of connectome-constrained models demand biologically-informed training and validation strategies.

One connectome-constrained, task-optimized approach used to model the adult *Drosophila* visual system involves a deep mechanistic network in which the connectivity between 64 cell types in the optic lobe motion pathways was fixed to experimentally measured values, while unknown single-neuron and synapse-type parameters were optimized via deep learning to perform optic flow estimation (Lappalainen et al., 2024). Ensembles of task-optimized deep mechanistic networks predicted neural tuning properties that agreed with experimental measurements across 26 independent studies, without explicitly imposing these properties during training. This indicates that connectome structure, combined with a known computational objective and gradient-based optimization, can bridge the gap between static wiring diagrams and neural dynamics. Subsequent connectome-constrained models include finer biological detail, like gap junctions (Chung & Kim, 2025), the raw connectome without simplifications (Duan et al., n.d.), or spiking neurons, but without task-based training to allow for emergent computations (Wang et al., 2026).

We combine all these principles into a spiking model of the larval *Drosophila* olfactory system with task-based

[1] Code and data availability: https://github.com/spiking-connectome-models/spiking_connectome_models.git

In submission to the *9th Conference on Cognitive Computational Neuroscience* (CCN 2026).

training. This is a compact sensory circuit that maps 21 odorant receptor types through several processing stages in the antennal lobe and mushroom body to produce sparse, decorrelated odor representations suitable for associative learning (Lin et al., 2014). The circuit is small but biophysically rich, incorporating gap junctions, lateral excitatory connections, and diverse local interneuron subtypes not considered in Lappalainen et al. (2024). Even with these additional features and compartment-resolved KC connectivity, our model has only 449 free biological parameters.

Using end-to-end training on a 28-odor classification task, with a rate-based teacher and surrogate gradient descent for fine-tuning, we show multiple emergent circuit properties that can be compared to independent biological benchmarks (Asahina et al., 2009; Bhandawat et al., 2007; Honegger et al., 2011; Mancini et al., 2023).

Systematic ablation of individual circuit components reveals their functional contributions, generating experimentally testable hypotheses directly from the trained model. This all suggests that connectome-constrained optimization is a viable methodology to extract functional principles of neural computation from anatomical data.

Methods

Overview

Can connectome data, combined with biophysical constraints and a simple learning objective, give rise to circuit-level computational models that match independent biological measurements? To answer this question, we built a spiking model of the larval *Drosophila* olfactory pathway with connectivity fixed by the Winding et al. (2023) connectome and trained for odor identification (Fig. 1). The model receives a 21-dimensional odorant receptor (OR) recorded response vector (Kreher et al., 2008) and predicts which of 28 odorants produced it. The OR vector is injected as a constant current into 42 ORNs (21 types $\times$ 2 hemispheres), which drive the spiking circuit for 30 simulation timesteps as the input is processed through the antennal lobe and into the mushroom body Kenyon cells (KC). A linear decoder reads out the time-averaged KC spike rates to produce a 28-way classification. The model is trained using a two-phase ANN-to-SNN transfer learning approach, repeated independently for an ensemble of 5 models to test whether the connectome constrains the learned solution. Decorrelation, calibrated APL inhibition, concentration invariance, and odor mixture coding are evaluated post-hoc against independent biological benchmarks not included in the loss function, and the contribution of specific circuit features evaluated by ablation.

Biological Data

Connectome: Neurons and synaptic connectivity were extracted from the complete larval *Drosophila* connectome (Winding et al., 2023). We identified all neurons in the olfactory pathway across both hemispheres by cell-type annotation: 42 olfactory receptor neurons (ORNs), 108 local neurons (LNs), 72 projection neurons (PNs), 144 Kenyon cells (KCs), and 2 anterior paired lateral (APL) interneurons. These 368 neurons are connected by a total of 40,000 synapses, providing the architecture for our model (Fig. 1). Only a single parameter is learned for each pre- and post-synaptic neuron type pair under a unitary synapse assumption.

Odorant Responses: ORN response profiles were taken from Kreher et al. (2008), which provides electrophysiological recordings of 21 larval OR types responding to 28 odorants. Responses were normalized to [0, 1] and used as input to our model. Multiplicative OR noise (30% coefficient of variation) was used to generate data from these OR response profiles. For each training epoch, 10 noisy repetitions of each odor are generated (280 samples per epoch); test performance is evaluated on 5 independent noise draws per odor (140 samples).

Spiking Neuron Model Features

LIF neurons: We used leaky integrate-and-fire (LIF) neurons with exact exponential integration, learnable per-neuron spike thresholds (distinct connectivity patterns warrant distinct excitability), a shared membrane time constant per population (within-type similarity) (Gouwens & Wilson, 2009); and fixed V_{reset} and τ_{ref} (little biological variability). The choice of which parameters to learn follows (Lappalainen et al., 2024), with spiking neuron-specific parameters from standard LIF parameterizations (Jürgensen et al., 2021):

$$V_\infty = V_{\text{rest}} + R_m\, I_{\text{syn}}(t) \tag{1}$$

$$V_i(t+\Delta t) = V_\infty + \big(V_i(t) - V_\infty\big)\exp\left(-\frac{\Delta t}{\tau_m}\right) \tag{2}$$

$$S_i(t) = \begin{cases} 1 & \text{if } V_i(t) \geq V_{\text{th},i} \text{ and } t - t_i^{\text{last}} > \tau_{\text{ref}} \\ 0 & \text{otherwise} \end{cases} \tag{3}$$

$$V_i(t) \leftarrow V_{\text{reset}} \quad \text{if } S_i(t) = 1 \tag{4}$$

Eq. 1 defines the steady-state voltage from synaptic input; Eq. 2 updates the membrane voltage via exponential decay toward this steady state; Eq. 3 is the spike function, which fires when voltage exceeds threshold outside the refractory period; and Eq. 4 resets the voltage after a spike.

V_∞ is the steady-state membrane voltage; $V_i(t)$ is the membrane voltage of neuron i; $V_{\text{rest}} = V_{\text{reset}} = -60$ mV; $R_m = 1$ GΩ; $I_{\text{syn}}(t)$ is the total synaptic input current; τ_m is the membrane time constant (learnable per population, bounded to 5–50 ms); $S_i(t) \in \{0, 1\}$ is the spike indicator (Eq. 3), equal to 1 when neuron i fires and 0 otherwise; $V_{\text{th},i}$ is the spike threshold (learnable per neuron,

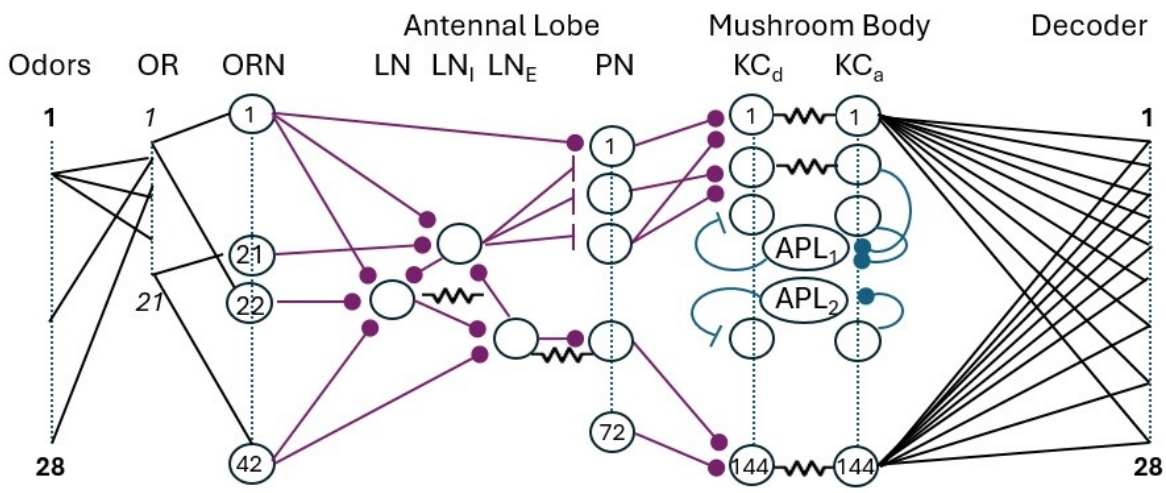

Figure 1: Schematic of the olfactory circuit. 28 input odors are encoded as patterns across 21 olfactory receptor (OR) types. These activate (one-to-one in each hemisphere) olfactory receptor neurons (ORN) projecting to the antennal lobe (AL). The AL includes local neurons (LNs) and projection neurons (PNs). LNs contact each other with chemical and electrical synapses (gap junctions) and some contact PNs either with 'broad' inhibition (LNI) or 'picky' excitation (LNE), also with gap junctions. PNs project to Kenyon cells (KCs) in the Mushroom Body. KCs are modeled with separate dendrite KC_d and axon KC_a, with electrical coupling. Half the KCs connect to each non-spiking APL neuron, which provides inhibitory feedback. For training, the KCs are fully connected to a decoding layer of 28 outputs. Additional connections not shown include gap junctions between PNs that share ORN input and axo-axonic connections between KCs. Note that all neural nodes (circles/ovals) and their connections are defined by the connectome. See text and Table 1 for the learnable parameters.

bounded to $[-55, -30]$ mV); and $\tau_{\text{ref}} = 2$ ms (fixed refractory period). We use a simulation timestep of $\Delta t = 1$ ms, which is standard for LIF simulations (Bellec et al., 2020) and matches the millisecond timescale of membrane dynamics and spike generation (Kistler & Gerstner, 2002). During training, the non-differentiable spike function is replaced by a sigmoid surrogate gradient to enable backpropagation (Neftci et al., 2019).

Graded APL interneuron: The APL neuron uses graded (non-spiking) transmission, integrating KC activity through a learnable time constant, (τ_{APL}, bounded to 10–50 ms), and providing global inhibitory feedback to all KCs through connectome-specified synaptic connections (Amin et al., 2020; Mancini et al., 2023).

Two-compartment KCs: KCs are modeled with separate dendritic (receives PN input) and axonal (spike-generating) compartments coupled by a learnable soma conductance (g_{soma}, bounded to 1–20 nS). This reflects the anatomical separation of the mushroom body calyx (KC dendrites) and lobes (KC axons).

Short-Term Synaptic Depression: Tsodyks-Markram short-term depression (STD) was applied to all chemical synaptic connections (Tsodyks & Markram, 1997). Each synapse type has two learnable parameters: recovery time constant (τ_{rec}) and release probability (u_{release}). STD provides activity-dependent gain control: stronger presynaptic drive depletes vesicles faster, automatically compressing the dynamic range. The dynamics follow $x_j(t+\Delta t) = 1-(1-x_j(t))\exp(-\Delta t/\tau_{\text{rec}})$ for vesicle recovery, $I_{\text{post},i}(t) = \sum_j W_{ij} S_j(t)\, u\, x_j(t)$ for synaptic transmission, and $x_j(t) \leftarrow x_j(t) - u\, x_j(t)\, S_j(t)$ for vesicle depletion, where $x_j \in [0,1]$ is the available vesicle fraction, τ_{rec} is the recovery time constant (20 ms–2 s), u is release probability (0.05–0.8), and W_{ij} is the connectome-fixed synaptic weight with learnable scalar strength.

Excitatory and Inhibitory LN Subtypes: Berck et al. (2016) identified inhibitory Broad LNs (GABAergic, high fan-out, widespread lateral inhibition) and excitatory Picky LNs (glutamatergic, low fan-out, selective excitation) as the two subtypes of antennal lobe LNs. We classified LNs by their fan-out in the Winding et al. (2023) connectome, and of 108 LNs, only 26 have LN→PN connections. The bottom third by fan-out (≤ 16 PN targets) were classified as excitatory Picky LNs (9 neurons), and the remainder as inhibitory Broad/Choosy LNs (17 neurons). The LN→PN connectivity matrix was thus split into inhibitory and excitatory pathways, each with an independently learned synaptic strength. As this 9:17 ratio differs from the 5:7 ratio reported in (Berck et al., 2016), we also tested three alternative thresholds (resulting in ratios of 1:4, 5:7, and 1:1), but did not see any effect on

any of the results described below.

Gap Junctions: Electrical synapses are a critical component of *Drosophila* antennal lobe circuitry, synchronizing membrane potentials between connected neurons (Huang et al., 2010; Kazama & Wilson, 2009; Yaksi & Wilson, 2010). Because the Winding et al. (2023) connectome does not include gap junction locations, we constructed proxy topologies for three documented types based on known biology, and modeled their current as $I_{\text{gap}} = g \cdot (V_{\text{pre}} - V_{\text{post}})$, with one learnable conductance g per type.

Since LNs that share chemical synapses are likely to be electrically coupled, we symmetrized the chemical LN→LN connectivity matrix. If either LN→LN direction had synapses, we placed a gap junction between that pair. PNs that share ORN input innervate the same glomerulus and are known to be electrically coupled (Kazama & Wilson, 2009). We identified sister PN–PN pairs by computing which PNs receive input from at least one common ORN. Meanwhile, picky (excitatory) LNs couple electrically to their target PNs as a primary output mechanism (Yaksi & Wilson, 2010). Although gap junctions between KCs have been documented in adult *Drosophila* (Liu et al., 2016; Shyu et al., 2019), direct evidence for KC–KC electrical coupling in the larval mushroom body is currently lacking, and they were thus excluded.

Biologically Realistic Noise: Six noise sources were applied during training to reflect the stochasticity inherent in biological neural circuits (Faisal et al., 2008): multiplicative OR noise (30% coefficient of variation), membrane voltage fluctuations (0.5 mV standard deviation), background current (5 pA standard deviation), stochastic synaptic release (15% release failure probability per spike), spike threshold jitter (0.2 mV standard deviation), and ORN receptor noise (5% coefficient of variation).

Biological Parameter Clamping: All neuron parameters were clamped to biologically plausible ranges after each optimizer step: $V_{\text{th}} \in [-55, -30]$ mV, $\tau_m \in [5, 50]$ ms, $g_{\text{soma}} \in [1, 20]$ nS, $\tau_{\text{APL}} \in [10, 50]$ ms, $\tau_{\text{ref}} = 2$ ms (fixed). These ranges are consistent with electrophysiological measurements in *Drosophila* olfactory neurons (Gouwens & Wilson, 2009). This prevents the optimizer from exploiting biologically implausible parameter regimes while allowing meaningful task-driven adaptation within realistic bounds.

Training Protocol

Training uses a two-phase transfer learning approach (Rathi et al., 2020).

Phase 1—Rate-based teacher: A non-spiking, rate-based model with identical connectome topology is trained using standard backpropagation on a 28-odor classification task (cross-entropy + sparsity loss). This training uses the methodology developed in Lappalainen et al. (2024) and achieves ∼70% accuracy, providing a good initialization for the spiking student.

Phase 2—Spiking student: The 449 learnable biological parameters of the spiking model are instantiated from the teacher with some scaling. The spiking model is then fine-tuned with cross-entropy loss plus a differentiable sparsity loss: $\mathcal{L}_{\text{sparse}} = \left(\frac{1}{N}\sum_i \sigma((r_i - 0.05) \times 50) - 0.10\right)^2$, where r_i is the mean firing rate of KC i and σ is the sigmoid function. This penalizes deviations from 10% KC activation, serving as a differentiable proxy for metabolic energy constraints that limit biological firing rates but are absent from the model. Spikes are generated using a soft surrogate gradient function $(1/(1 + \beta|x|))^2$ with $\beta = 10$) to enable backpropagation during training (Neftci et al., 2019). Zenke and Ganguli (2018) demonstrate similar performance across surrogate forms (sigmoid, exponential, piecewise-linear), supporting our use of the sigmoid. Gradient clipping and per-layer learning rate multipliers compensate for gradient attenuation through spiking layers. Each spiking model is trained from its own independently-trained teacher, ensuring that observed cross-model consistency reflects connectome constraints rather than shared initialization.

Results

Classification Accuracy and KC Sparsity

We successfully trained the connectome-constrained and biophysically-inspired spiking models of the larval *Drosophila* olfactory pathway on the odor classification task. Training was applied independently to produce an ensemble of five spiking models which achieved 71.3% ± 1.6% test accuracy on 28-odor classification (∼20× random chance), with KC sparsity of 12.6% ± 0.3% compared to a biological target of 5–10% (Lin et al., 2014). Sparsity is the fraction of KCs active during a 30 ms odor presentation.

Per-odor analysis reveals structured sparse coding, and different odors activate distinct KC subsets, with ∼87% of KCs silent for any given stimulus. Sparsity correlates with OR response strength, so odors with strong, distinctive OR profiles produce denser KC activation.

A zero-parameter nearest-centroid classifier was used to test whether classification performance resides in the KC representations or depends on the trained linear decoder. For each odor, we computed the centroid as the mean KC spike pattern (a 144-dimensional vector) across all training samples. Test samples were then classified by cosine similarity, the standard metric for evaluating expansion coding in sparse population codes (Bernardi et al., 2020; Jürgensen et al., 2021; Srinivasan et al., 2023), i.e., each test KC pattern was

Table 1: Learnable Parameters

Parameter	Count
Input & membrane parameters	
OR gain (per receptor type)	21
Global OR→ORN gain	1
ORN / LN / PN / APL τ_m (per population)	4
ORN v_{th} (per neuron)	42
LN v_{th} (per neuron)	108
PN v_{th} (per neuron)	72
KC v_{th} (per neuron)	144
AL chemical synapses (w, τ_{rec}, U each) axo-dendritic (AD) and non-AD	
ORN→PN / ORN→LN / LN→PN inhib / LN→PN excit	$4 \times 3 \times 2$
LN→LN / PN→LN / PN→KC	$3 \times 3 \times 2$
KC & MB parameters	
KC→KC axo-axonic and axo-dendritic synapses (w, τ_{rec}, U each)	3×2
Gap junction g: LN–LN, PN–PN, eLN–PN / KC soma conductance g_{soma}	4
KC-KC dendro-dendritic / dendro-axonic pathway gain	2
KC→APL strength / KC dendrite→APL gain / APL output gain	3
Decoder	
Decoder weights (144×28)	4,032
Decoder bias	28
Circuit subtotal	**449**
Decoder subtotal	**4,060**
Total	**4,509**

assigned to the odor with the nearest training centroid. This classifier has no learnable parameters, instead exploiting the geometry of the KC representation space. The centroid classifier achieves 65.2% $\pm$ 2.3%, demonstrating that the KC representations themselves carry significant odor identity information, while confirming that the mushroom body produces well-separated, linearly decodable odor representations.

Per-odor analysis reveals a variation in classification difficulty that reflects known properties of the input data, with several odors consistently misclassified for identifiable biological reasons. Carbon dioxide (CO_2) achieves low accuracy because it is detected by the gustatory receptors Gr21a and Gr63a, not by any of the 21 ORs in our model (Jones et al., 2007; Kwon et al., 2007). The ester cluster is a group of odors whose OR response profiles we find to be nearly identical. At least 7 odor pairs have pairwise cosine similarities exceeding 0.90, making them nearly indistinguishable at the receptor level. A real larva likely perceives these as a single "fruity ester" category rather than 6 distinct chemicals. Weak-response odors such as sfr (spontaneous firing rate, i.e., no odor), geranyl acetate, and propanoic acid have flat or low-amplitude OR profiles that blur with baseline noise. Despite these inherent biological constraints on discriminability, the model achieves $\sim$70% accuracy, which is quite reasonable given that larval chemotaxis assays yield moderate response indices even for strong attractants. Kreher et al. (2008) report response indices ranging from -0.40 (geranyl acetate, repellent) to 0.74 (E2-hexenal, strongest attractant), indicating that behavioral discrimination is imperfect even for the biological circuit.

Emergent Computations

Decorrelation is Localized to the Mushroom Body: A proposed function of the olfactory circuit, and more specifically of the divergent PN→KC projections, is to produce sparse, high-dimensional KC representations in which overlapping odor-evoked patterns are decorrelated to support discriminative learning (Bhandawat et al., 2007; Caron et al., 2013; Lin et al., 2014). Our model reproduces this prediction quantitatively, with about 5% decorrelation (based on cosine similarity ratios between processing stages) occurring in the antennal lobe, compared to 35% in the MB, with patterns in odor cosine similarities manifesting in KC spike activity (Fig. 2).

APL Inhibition Matches Biological Measurements: To assess if our model could reproduce a quantitative benchmark for the inhibitory function of the non-spiking APL interneurons, we mimicked optogenetic APL activation as described in Mancini et al. (2023). In the baseline condition, we injected a weak excitatory current (1×10^{-10} A) into all 144 KCs to mimic the carbachol-induced spontaneous activity used in the biological experiment, while the APL neuron received no additional drive. In the APL-activated condition, the same KC current was applied but the APL neuron additionally received a depolarizing current (0.7 in the model's internal current units, chosen to stimulate the APL without saturating it), simulating the optogenetic APL activation used by Mancini et al. (2023). We then measured total KC spike counts across 20 trials per condition and computed the baseline KC spikes divided by APL-activated KC spikes. Across the 5-model ensemble, the KC spike ratio is 1.85 ± 0.03, corresponding to $\sim$46% KC suppression and closely matching the biological data of $\sim$50%. In both cases, the APL suppresses KCs meaningfully but not entirely.

Concentration Invariance Emerges from Circuit Architecture: Another functional feature proposed for this circuit is that it supports odor identification over a range of concentrations through gain control. We used a single concentration in training, and tested whether concentration invariance had emerged in the trained models. We tested the circuit's generalization for relative concentrations of c = 0.03–5.0, using Hill dose-response scaling on the input. Several biological pre-

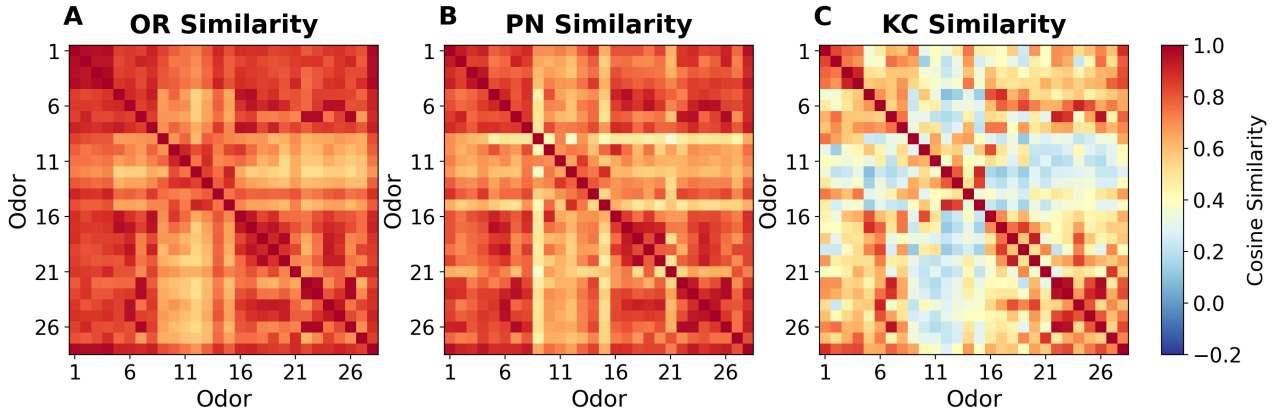

Figure 2: Progressive decorrelation of odor representations across the olfactory pathway (A–C) is shown using pairwise cosine similarity matrices for the 28 odors at successive processing layers, averaged over 5 independently trained models (20 noisy trials each). Odors 9–15 represent a distinct group of aromatic compounds, which manifests in the lack of similarity between them and the other odors that represent aliphatic compounds. (A) OR input shows high inter-odor similarity. (B) PN output after antennal lobe processing shows modest decorrelation (∼5%). (C) KC output after MB expansion and APL inhibition shows substantial decorrelation (∼35%), reducing total pairwise similarity by ∼39% relative to OR input.

dictions are confirmed by the model (Fig. 3). First, PNs exhibit sublinear gain, with their dynamic range ($1.25 \pm 0.03\times$) compressed below the OR input range ($1.75\times$), likely by LN inhibition and STD, consistent with Olsen et al. (2010). APL-mediated normalization compresses KC dynamic range $\sim 1.14\times$ below that of upstream PNs as expected (Prisco et al., 2021). Meanwhile, classification remains robust, with accuracy ranging from 44–78% across $c = 0.3$–5.0 (a 17-fold physical range), well above the 3.7% chance level and consistent with the behavioral concentration tolerance observed by Asahina et al. (2009). The prediction that KC population codes are concentration-invariant (Stopfer et al., 2003) receives some support, with cross-concentration centroid accuracy degrading only at very low concentrations, likely due to single-concentration training and the absence of ORN adaptation.

Odor Mixtures Produce Sub-Additive KC Responses: To test generalization beyond the single odors used for training, we presented 2–3 odor mixtures (element-wise sums of component OR patterns, 378 pairs + 50 triplets per seed) to the trained models. For 2-odor mixtures, 75.1% of individual KCs respond less to the mixture than predicted by summing their responses to each component alone (sub-additive), closely matching the 73% reported for binary blends by Honegger et al. (2011); for 3-odor mixtures, 80.5% are sub-additive. Mixture KC representations are geometrically distinct from components (cosine similarity 0.806) and linearly separable by a support vector machine (74.6%), despite no mixture-specific training.

Connectome Dominates Learned Solutions

If the connectome genuinely constrains the model, independently trained models should converge to similar solutions. We find consistency in KC spike patterns, with similarity across models reaching 0.941. Weighted-average correlation across all parameters increases from teacher–teacher $r = 0.781$ to student–student $r = 0.911$ ($\Delta = +0.130$), with the largest gains in KC thresholds ($0.532 \rightarrow 0.951$) and decoder weights ($0.787 \rightarrow 0.906$). Scalar parameters (synaptic strengths, gap conductances, g_{soma}, τ_{APL}) converge to CV $< 1\%$ across students, down from 11% in the teacher. The connectome already constrains the rate-based teachers, but spiking dynamics impose additional convergence, demonstrating that both structure and biophysics jointly determine the solution.

Parameter Boundaries

All 366 spiking neurons are clamped to biological parameter ranges and most converge to the interior of the range. The main exception is KC spike thresholds, where ∼47% (65–69/144) hit the upper boundary (-30 mV), driven by the two-compartment g_{soma} bottleneck and absence of KC gap junctions. This is KC-specific, as LNs favor the lower bound (∼29%) and PNs stay interior (∼83%). The fraction of KCs reaching this bound scales with task difficulty (11.7% at 7 odors, 35.7% at 14, 47.2% at 28, 56.5% at 56), suggesting extreme KC thresholds are a sparsity mechanism. Gap junction and KC soma conductances are consistent across models (LN–LN 0.135 ± 0.004 nS,

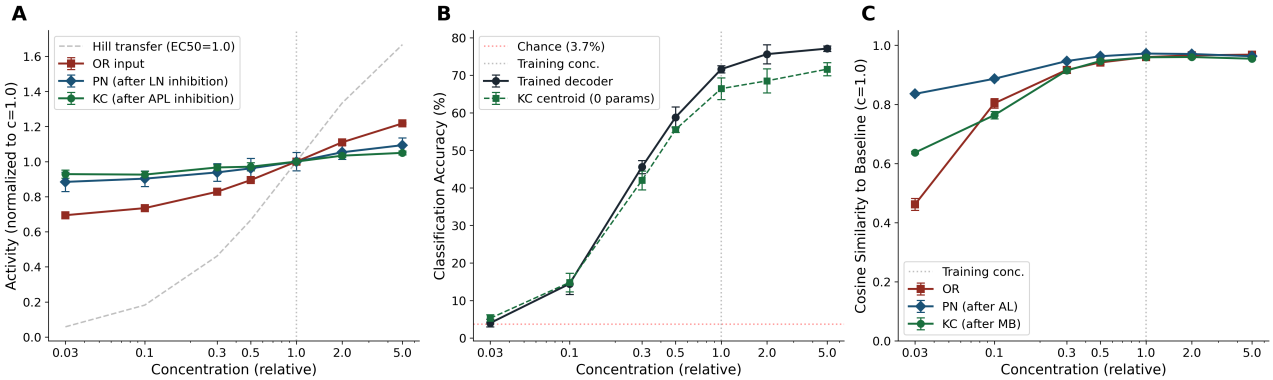

Figure 3: Concentration invariance and sparse KC coding (means and standard deviations plotted). (A) Normalized population activity across OR, PN, and KC layers as a function of odor concentration, showing progressive gain compression through successive circuit stages. The dashed line shows the Hill transfer function (EC50 = 1.0). (B) Odor classification accuracy versus concentration for the trained decoder and parameter-free KC centroid classifier. (C) Cosine similarity of layer-wise representations to the training concentration. PN representations maintain higher similarity to the training concentration than KCs do, although OR, PN, and KC representations all maintain relative stability across concentrations; the greater KC sensitivity reflects sparse coding selectivity, not a circuit failure.

PN–PN 0.096 $\pm$ 0.002 nS, eLN–PN 0.082 $\pm$ 0.003 nS, g_{soma} = 14.5 $\pm$ 0.1 nS).

Ablation Studies Reveal Component Contributions

To isolate individual circuit contributions, we performed four ablation experiments, each tested both prior to and after training (except (iv), retrained only). (i) Gap junctions: dispensable when retrained; post-hoc removal collapsed accuracy while preserving decorrelation. (ii) APL disabled: AL decorrelation tripled (17.1% vs 4.8%) while MB decorrelation dropped (31.3% vs 35.1%), shifting decorrelation upstream; post-hoc removal doubled KC sparsity (33.0% vs 12.5%). (iii) STD removed: eliminated gain control (PN 2.78$\times$, KC 2.74$\times$ vs canonical 1.25$\times$, 1.14$\times$); post-hoc removal dropped accuracy and doubled KC sparsity. (iv) Shuffled connectome: accuracy dropped slightly, AL decorrelation rose to 15.7%, showing specific wiring carries functional information beyond degree distribution.

Sparsity Loss for Successful Training

Our training explicitly included sparsity as a constraint, in addition to the task-motivated cross-entropy loss for odor classification. The sparsity loss might be considered to approximate metabolic energy constraints absent from the model, but it is possible that KC sparsity could emerge from connectivity constraints, e.g., the broad inhibitory feedback from the APL. To investigate this further, we tested three constraint forms in the loss function: (i) no sparsity loss, (ii) an all-neuron energy penalty, and (iii) a KC-specific energy penalty. Without any sparsity loss, the optimizer drives 80% KC activity and eliminates MB decorrelation, overwhelming APL inhibition. The all-neuron penalty fails because ORNs and LNs have fewer downstream synapses than KCs, so suppressing them costs less gradient and the optimizer silences the AL rather than sparsifying KCs. A KC-specific penalty avoids this shortcut, preserving AL processing and producing biological sparsity and decorrelation. We therefore assume KC-specific loss proxies cell-type-specific homeostatic dynamics and regulatory mechanisms not captured by the connectome.

Discussion

Connectome-derived rate-based models of the adult *Drosophila* visual system have previously been trained and validated against existing biological data (Lappalainen et al., 2024). Our work extends this approach while including several features not previously combined in a single connectome-constrained model. We use spiking LIF neurons throughout the antennal lobe alongside a graded (non-spiking) APL interneuron, modeling two biophysically distinct neuron types within this circuit. KCs are modeled with two compartments (dendritic and axonal) coupled by a learnable soma conductance, capturing the anatomical separation of the mushroom body calyx and lobes. Electrical gap junctions with proxy topologies derived from the connectome are incorporated, allowing the model to learn gap junction conductances alongside chemical synaptic strengths. Also included are Tsodyks-Markram short-term depression on all chemical synapses (Tsodyks & Markram, 1997), excitatory and inhibitory LN subtypes (Berck et al., 2016), and KC-KC lateral axo-axonic excitation (Winding et al., 2023). Finally, we train the model using

an ANN-to-SNN transfer learning pipeline, first training a rate-based model with standard backpropagation, then fine-tuning parameters with surrogate gradient descent.

After learning 449 biophysical parameters within biological bounds, this structurally faithful connectome-constrained model spontaneously reproduces multiple independently measured circuit properties, including decorrelation localized to the mushroom body, calibrated APL inhibition, sub-additive odor mixture code matching, and a degree of concentration invariance. None of these properties were part of the training objective, meaning they emerged from the interaction of connectome structure, biophysical constraints, and a simple classification task. This convergence to biologically realistic solutions suggests that the connectome imposes some functional constraints that narrow the space of viable solutions. Further, connectome-constrained optimization offers a principled framework that leverages large-scale anatomical data to infer unmeasured biophysical parameters such as g_{soma}, gap junction conductances, and synaptic depression time constants from task performance alone, yielding testable predictions that can guide future experiments.

Beyond reproducing known biology, this methodology provides a trained model that serves as a platform for *in silico* experiments able to generate testable hypotheses. Our ablation studies imply that the APL localizes decorrelation to the mushroom body, that short-term depression plays a role in concentration-dependent gain control, and that specific topology encodes function beyond degree distribution. These constitute predictions that could be tested by targeted optogenetic or pharmacological manipulation in the larval circuit.

Limitations and Future Work

There are important caveats to interpreting the resulting models. The approach requires a meaningful training objective, and ours (simple odor classification) is a proxy for the true biological objective, which likely encompasses a richer set of behavioral demands that would require downstream circuitry (MBONs, motor neurons) not included in the current model. Further, connectome-constrained optimization cannot prove that the biological circuit uses the same parameter values our models learn. It can only suggest that the connectome with task and parameter constraints permits biologically realistic solutions within those ranges. It is also unable to capture properties absent from the connectome data, including neuromodulation, experience-dependent structural plasticity, or synaptic connections below the detection threshold of EM reconstruction.

The hyperparameter tuning required for stable spiking network training—learning rates, noise levels, gradient clipping—is itself not biologically derived, representing an engineering necessity. Similarly, the use of surrogate gradient training and transfer learning is a methodological choice, not a biological claim. Gradient-based optimization naturally drives increased spiking activity to maximize classification information, opposing the biological sparsity maintained by APL inhibition. The explicit KC-specific sparsity loss is needed to counteract this pressure and serves as a proxy for cell-type-specific homeostatic mechanisms absent from the model.

There are nevertheless several important directions to further explore with the existing model. The olfactory circuit can be extended to include additional neurons in the mushroom body, specifically dopaminergic neurons and MBONs involved in learned responses to odors. There is a substantial body of neural imaging data for this circuit that could be used for validation. Also of interest would be to extend the pathway from the antennal lobe via the mushroom body to descending neurons controlling motor behavior and directly compare circuit outputs to behavioral data such as steering responses in odor gradients. For larger connectomes, a piecewise training strategy (training individual subcircuits independently before end-to-end fine-tuning) may manage the increased parameter count and gradient flow.

Conclusion

This work demonstrates connectome-constrained spiking neural networks can reproduce emergent computations in the larval *Drosophila* olfactory pathway. The Winding et al. (2023) connectome combined with biophysical constraints and task-driven optimization gives rise to decorrelation, appropriate suppression of KCs by the APL, sub-additive mixture coding, and concentration-invariant gain control that each match independent biological measurements. Our ensemble of five independently trained models converges to consistent solutions, demonstrating the role of the connectome in determining circuit function.

The methodology developed here (connectome-fixed topology, minimal learnable parameters, biophysical clamping, and independent validation) is not specific to the larval *Drosophila* olfactory system. As connectomes become available for larger circuits, such as the entire adult *Drosophila* brain (Dorkenwald et al., 2024; Schlegel et al., 2024) and the mouse visual cortex (MICrONS-Consortium, 2025), scaling will become a critical question as we determine which biological measurements and task-based training methods can constrain the much larger parameter space. The ablation framework introduced here is applicable to other connectome-constrained models and provides a principled approach to generating experimentally testable hypotheses from anatomical data.

Acknowledgments

Claude Code was used for some code generation.

References

Amin, H., Apostolopoulou, A. A., Suárez-Grimalt, R., Vrontou, E., & Lin, A. C. (2020). Localized inhibition in the drosophila mushroom body. *Elife*, *9*, e56954.

Asahina, K., Louis, M., Piccinotti, S., & Vosshall, L. B. (2009). A circuit supporting concentration-invariant odor perception in drosophila. *Journal of biology*, *8*(1), 9.

Bellec, G., Scherr, F., Subramoney, A., Hajek, E., Salaj, D., Legenstein, R., & Maass, W. (2020). A solution to the learning dilemma for recurrent networks of spiking neurons. *Nature communications*, *11*(1), 3625.

Berck, M. E., Khandelwal, A., Claus, L., Hernandez-Nunez, L., Si, G., Tabone, C. J., Li, F., Truman, J. W., Fetter, R. D., Louis, M., et al. (2016). The wiring diagram of a glomerular olfactory system. *Elife*, *5*, e14859.

Bernardi, S., Benna, M. K., Rigotti, M., Munuera, J., Fusi, S., & Salzman, C. D. (2020). The geometry of abstraction in the hippocampus and prefrontal cortex. *Cell*, *183*(4), 954–967.

Bhandawat, V., Olsen, S. R., Gouwens, N. W., Schlief, M. L., & Wilson, R. I. (2007). Sensory processing in the drosophila antennal lobe increases reliability and separability of ensemble odor representations. *Nature neuroscience*, *10*(11), 1474–1482.

Caron, S. J., Ruta, V., Abbott, L. F., & Axel, R. (2013). Random convergence of olfactory inputs in the drosophila mushroom body. *Nature*, *497*(7447), 113–117.

Chung, T., & Kim, S. (2025). Optimization of connectome weights for a neural network model generating both forward and backward locomotion in c. elegans. *bioRxiv*, 2025–07.

Dorkenwald, S., Matsliah, A., Sterling, A. R., Schlegel, P., Yu, S.-C., McKellar, C. E., Lin, A., Costa, M., Eichler, K., Yin, Y., et al. (2024). Neuronal wiring diagram of an adult brain. *Nature*, *634*(8032), 124–138.

Duan, S., Dong, L. L., & Fiete, I. R. (n.d.). From synapses to dynamics: Obtaining function from structure in a connectome constrained model of the head direction circuit. *The Thirty-ninth Annual Conference on Neural Information Processing Systems*.

Faisal, A. A., Selen, L. P., & Wolpert, D. M. (2008). Noise in the nervous system. *Nature reviews neuroscience*, *9*(4), 292–303.

Gouwens, N. W., & Wilson, R. I. (2009). Signal propagation in drosophila central neurons. *Journal of Neuroscience*, *29*(19), 6239–6249.

Honegger, K. S., Campbell, R. A., & Turner, G. C. (2011). Cellular-resolution population imaging reveals robust sparse coding in the drosophila mushroom body. *Journal of neuroscience*, *31*(33), 11772–11785.

Huang, J., Zhang, W., Qiao, W., Hu, A., & Wang, Z. (2010). Functional connectivity and selective odor responses of excitatory local interneurons in drosophila antennal lobe. *Neuron*, *67*(6), 1021–1033.

Jones, W. D., Cayirlioglu, P., Grunwald Kadow, I., & Vosshall, L. B. (2007). Two chemosensory receptors together mediate carbon dioxide detection in drosophila. *Nature*, *445*(7123), 86–90.

Jürgensen, A.-M., Khalili, A., Chicca, E., Indiveri, G., & Nawrot, M. P. (2021). A neuromorphic model of olfactory processing and sparse coding in the drosophila larva brain. *Neuromorphic Computing and Engineering*, *1*(2), 024008.

Kazama, H., & Wilson, R. I. (2009). Origins of correlated activity in an olfactory circuit. *Nature neuroscience*, *12*(9), 1136–1144.

Kistler, W. M., & Gerstner, W. (2002). Stable propagation of activity pulses in populations of spiking neurons. *Neural computation*, *14*(5), 987–997.

Kreher, S. A., Mathew, D., Kim, J., & Carlson, J. R. (2008). Translation of sensory input into behavioral output via an olfactory system. *Neuron*, *59*(1), 110–124.

Kwon, J. Y., Dahanukar, A., Weiss, L. A., & Carlson, J. R. (2007). The molecular basis of co2 reception in drosophila. *Proceedings of the National Academy of Sciences*, *104*(9), 3574–3578.

Lappalainen, J. K., Tschopp, F. D., Prakhya, S., McGill, M., Nern, A., Shinomiya, K., Takemura, S.-y., Gruntman, E., Macke, J. H., & Turaga, S. C. (2024). Connectome-constrained networks predict neural activity across the fly visual system. *Nature*, *634*(8036), 1132–1140.

Lin, A. C., Bygrave, A. M., De Calignon, A., Lee, T., & Miesenböck, G. (2014). Sparse, decorrelated odor coding in the mushroom body enhances learned odor discrimination. *Nature neuroscience*, *17*(4), 559–568.

Liu, Q., Yang, X., Tian, J., Gao, Z., Wang, M., Li, Y., & Guo, A. (2016). Gap junction networks in mushroom bodies participate in visual learning and memory in drosophila. *Elife*, *5*, e13238.

Mancini, N., Thoener, J., Tafani, E., Pauls, D., Mayseless, O., Strauch, M., Eichler, K., Champion, A., Kobler, O., Weber, D., et al. (2023). Rewarding capacity of optogenetically activating a giant gabaergic central-brain interneuron in larval drosophila. *Journal of Neuroscience*, *43*(44), 7393–7428.

MICrONS-Consortium. (2025). Functional connectomics spanning multiple areas of mouse visual cortex. *Nature*, *640*(8058), 435–447.

Neftci, E. O., Mostafa, H., & Zenke, F. (2019). Surrogate gradient learning in spiking neural networks. *IEEE Signal Processing Magazine*, *36*(6), 51–63.

Olsen, S. R., Bhandawat, V., & Wilson, R. I. (2010). Divisive normalization in olfactory population codes. *Neuron*, *66*(2), 287–299.

Prisco, L., Deimel, S. H., Yeliseyeva, H., Fiala, A., & Tavosanis, G. (2021). The anterior paired lateral neuron normalizes odour-evoked activity in the drosophila mushroom body calyx. *Elife*, *10*, e74172.

Rathi, N., Srinivasan, G., Panda, P., & Roy, K. (2020). Enabling deep spiking neural networks with hybrid conversion and spike timing dependent backpropagation. *International Conference on Learning Representations*.

Schlegel, P., Yin, Y., Bates, A. S., Dorkenwald, S., Eichler, K., Brooks, P., Han, D. S., Gkantia, M., Dos Santos, M., Munnelly, E. J., et al. (2024). Whole-brain annotation and multi-connectome cell typing of drosophila. *Nature*, *634*(8032), 139–152.

Shyu, W.-H., Lee, W.-P., Chiang, M.-H., Chang, C.-C., Fu, T.-F., Chiang, H.-C., Wu, T., & Wu, C.-L. (2019). Electrical synapses between mushroom body neurons are critical for consolidated memory retrieval in drosophila. *PLoS genetics*, *15*(5), e1008153.

Srinivasan, S., Daste, S., Modi, M. N., Turner, G. C., Fleischmann, A., & Navlakha, S. (2023). Effects of stochastic coding on olfactory discrimination in flies and mice. *PLoS biology*, *21*(10), e3002206.

Stopfer, M., Jayaraman, V., & Laurent, G. (2003). Intensity versus identity coding in an olfactory system. *Neuron*, *39*(6), 991–1004.

Tsodyks, M. V., & Markram, H. (1997). The neural code between neocortical pyramidal neurons depends on neurotransmitter release probability. *Proceedings of the national academy of sciences*, *94*(2), 719–723.

Wang, C., Dong, X., Ji, Z., Xiao, M., Jiang, J., Liu, X., Huan, Y., & Wu, S. (2026). Model-agnostic linear-memory online learning in spiking neural networks. *Nature Communications*, *17*, 1745.

Winding, M., Pedigo, B. D., Barnes, C. L., Patsolic, H. G., Park, Y., Kazimiers, T., Fushiki, A., Andrade, I. V., Khandelwal, A., Valdes-Aleman, J., et al. (2023). The connectome of an insect brain. *Science*, *379*(6636), eadd9330.

Yaksi, E., & Wilson, R. I. (2010). Electrical coupling between olfactory glomeruli. *Neuron*, *67*(6), 1034–1047.

Zenke, F., & Ganguli, S. (2018). Superspike: Supervised learning in multilayer spiking neural networks. *Neural computation*, *30*(6), 1514–1541.

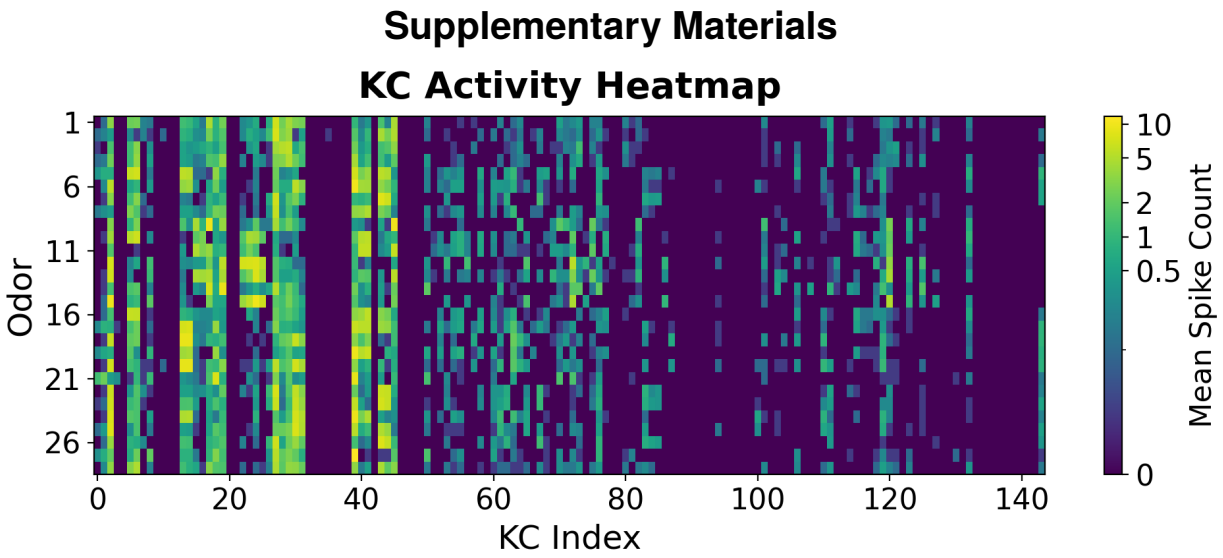

Figure S1. The mean KC activity heatmap shows how a sparsely active neural population can encode odorant representations, with certain KCs more susceptible to the aromatic compounds (like KCs 22–25) and others to aliphatic (like KCs 28–31) for example.