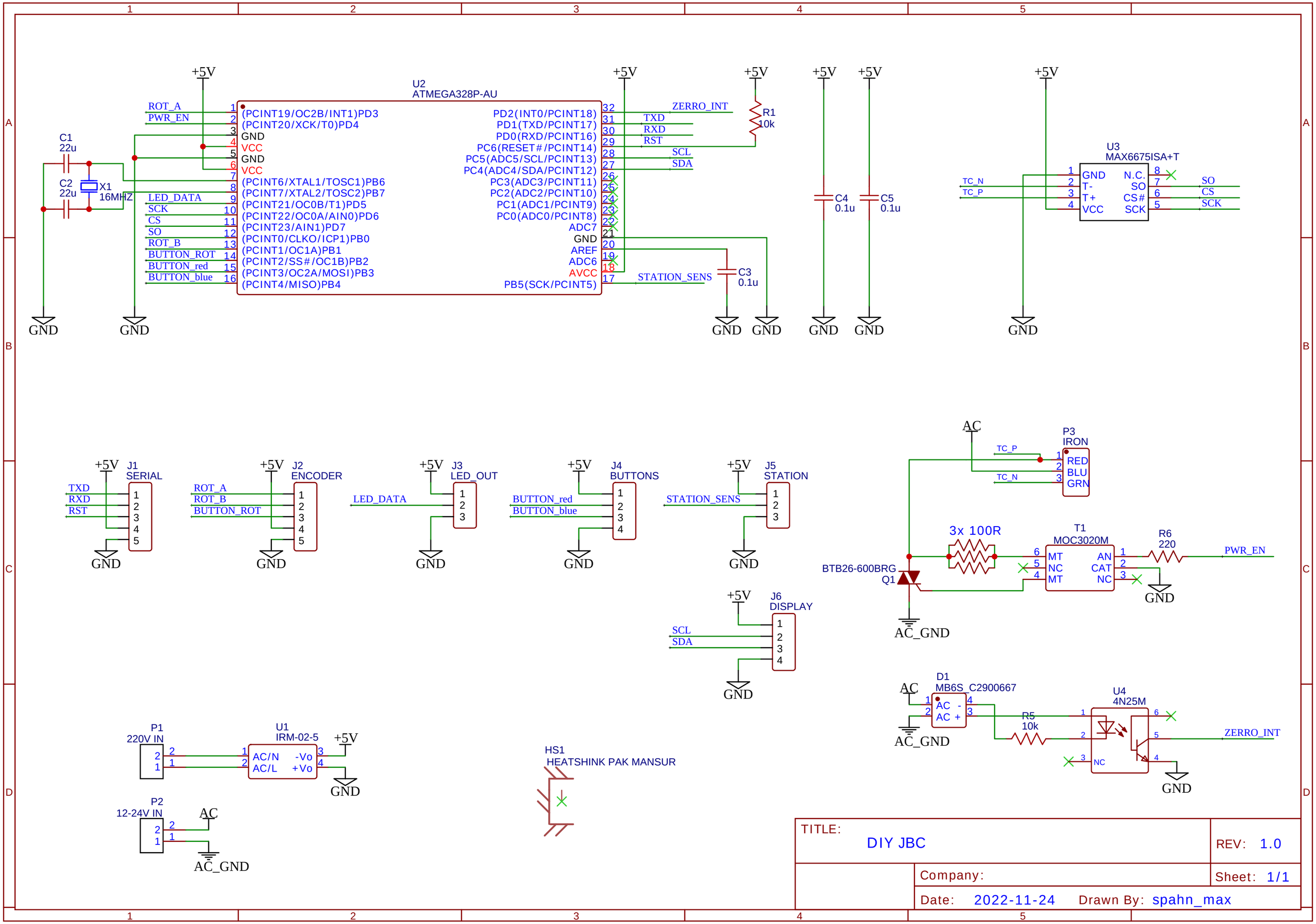
U2
ATMEGA328P-AU
(PCINT19/OC2B/INT1)PD3
(PCINT20/XCK/T0)PD4
GND
VCC
GND
VCC
(PCINT6/XTAL1/TOSC1)PB6
(PCINT7/XTAL2/TOSC2)PB7
(PCINT21/OC0B/T1)PD5
(PCINT22/OC0A/AIN0)PD6
(PCINT23/AIN1)PD7
(PCINT0/CLKO/ICP1)PB0
(PCINT1/OC1A)PB1
(PCINT2/SS#/OC1B)PB2
(PCINT3/OC2A/MOSI)PB3
(PCINT4/MISO)PB4
PD2(INT0/PCINT18)
PD1(TXD/PCINT17)
PD0(RXD/PCINT16)
PC6(RESET#/PCINT14)
PC5(ADC5/SCL/PCINT13)
PC4(ADC4/SDA/PCINT12)
PC3(ADC3/PCINT11)
PC2(ADC2/PCINT10)
PC1(ADC1/PCINT9)
PC0(ADC0/PCINT8)
ADC7
GND
AREF
ADC6
AVCC
PB5(SCK/PCINT5)
ROT_A
PWR_EN
LED_DATA
SCK
CS
SO
ROT_B
BUTTON_ROT
BUTTON_red
BUTTON_blue
ZERRO_INT
TXD
RXD
RST
SCL
SDA
STATION_SENS
C1
22u
C2
22u
X1
16MHZ
R1
10k
C3
0.1u
C4
0.1u
C5
0.1u
+5V
GND
U3
MAX6675ISA+T
GND
T-
T+
VCC
N.C.
SO
CS#
SCK
TC_N
TC_P
J1
SERIAL
J2
ENCODER
J3
LED_OUT
J4
BUTTONS
J5
STATION
J6
DISPLAY
P3
IRON
RED
BLU
GRN
AC
AC_GND
3x 100R
T1
MOC3020M
MT
NC
AN
CAT
R6
220
BTB26-600BRG
Q1
D1
MB6S_C2900667
AC -
AC +
R5
10k
U4
4N25M
NC
P1
220V IN
U1
IRM-02-5
AC/N
AC/L
-Vo
+Vo
P2
12-24V IN
HS1
HEATSHINK PAK MANSUR
TITLE:
DIY JBC
REV: 1.0
Company:
Sheet: 1/1
Date: 2022-11-24
Drawn By: spahn_max