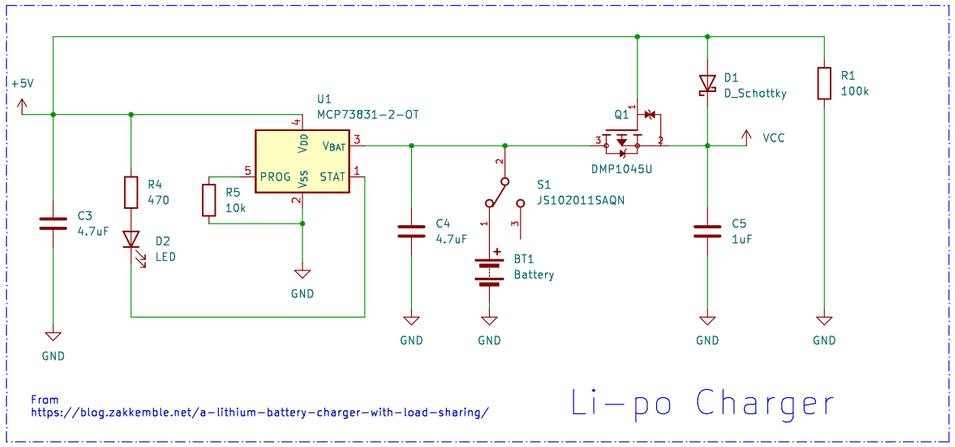

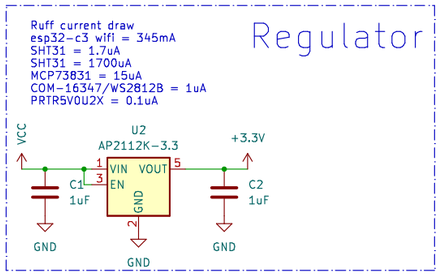

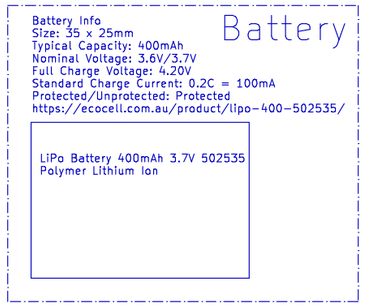

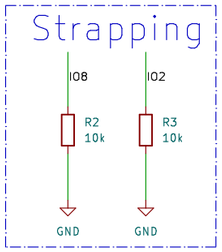

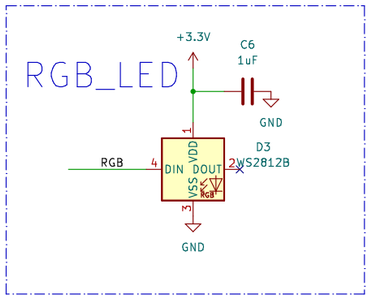

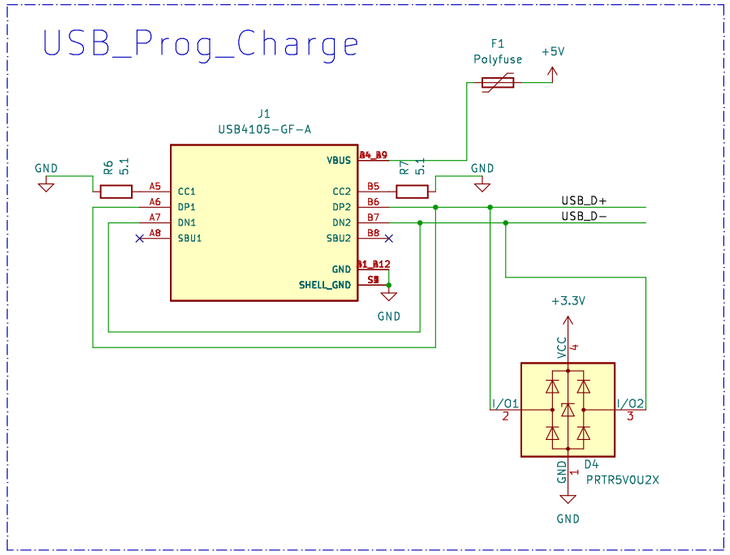

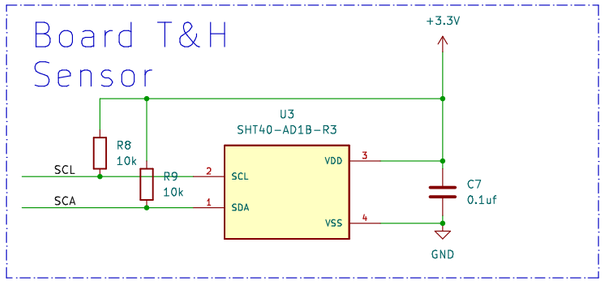

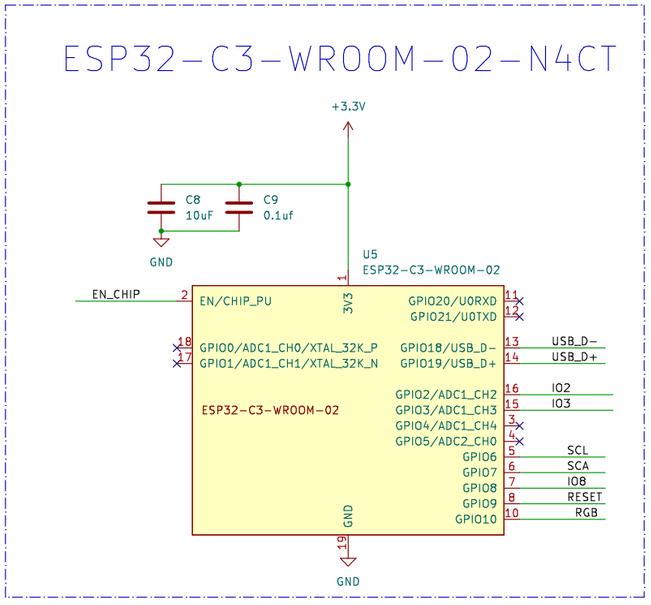

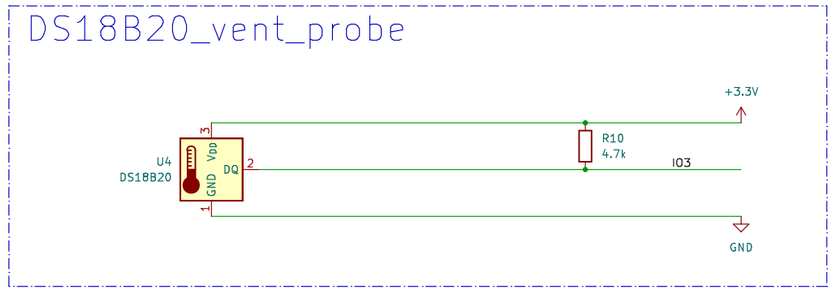

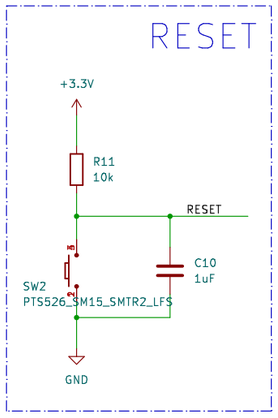

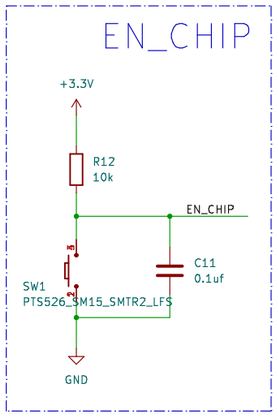

Sheet: /		
File: Arsnic.kicad_sch		
Title:		
Size: A3	Date:	**Rev:**
KiCad E.D.A. kicad 7.0.10		Id: 1/1