Change List

01_Vesion 1.0 Created at 2017/4/4	XD.N09001AA
02_Vesion 1.1 Created at 2017/5/5	XD.N09001BA

01_Fixed phase current amplifying circuit bias bug

02_Delete reset button

03_Re-layout MA700

for correct magnetic field direction measurement

04_Add Test Point for externally mount MA700

Motor Driver Board_Pitch Or Roll

01_INDEX

02_Block Diagram

03_Power

04_STM32

05_MOS Driver

06_3H-Bridges MOS+Shunt Resistor

07_Phase Current and Voltage Sensor

08_MA700

Wednesday, September 07, 2016

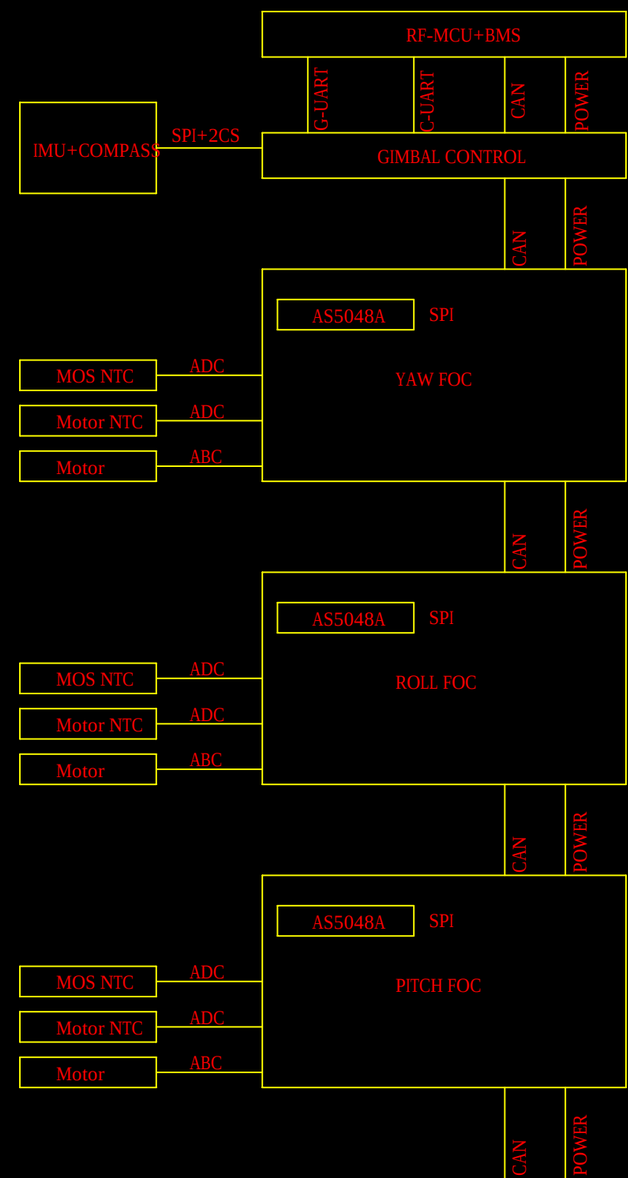
RF-MCU+BMS
G-UART
C-UART
CAN
POWER
IMU+COMPASS
SPI+2CS
GIMBAL CONTROL
CAN
POWER
AS5048A
SPI
YAW FOC
MOS NTC
ADC
Motor NTC
ADC
Motor
ABC
CAN
POWER
AS5048A
SPI
ROLL FOC
MOS NTC
ADC
Motor NTC
ADC
Motor
ABC
CAN
POWER
AS5048A
SPI
PITCH FOC
MOS NTC
ADC
Motor NTC
ADC
Motor
ABC
CAN
POWER

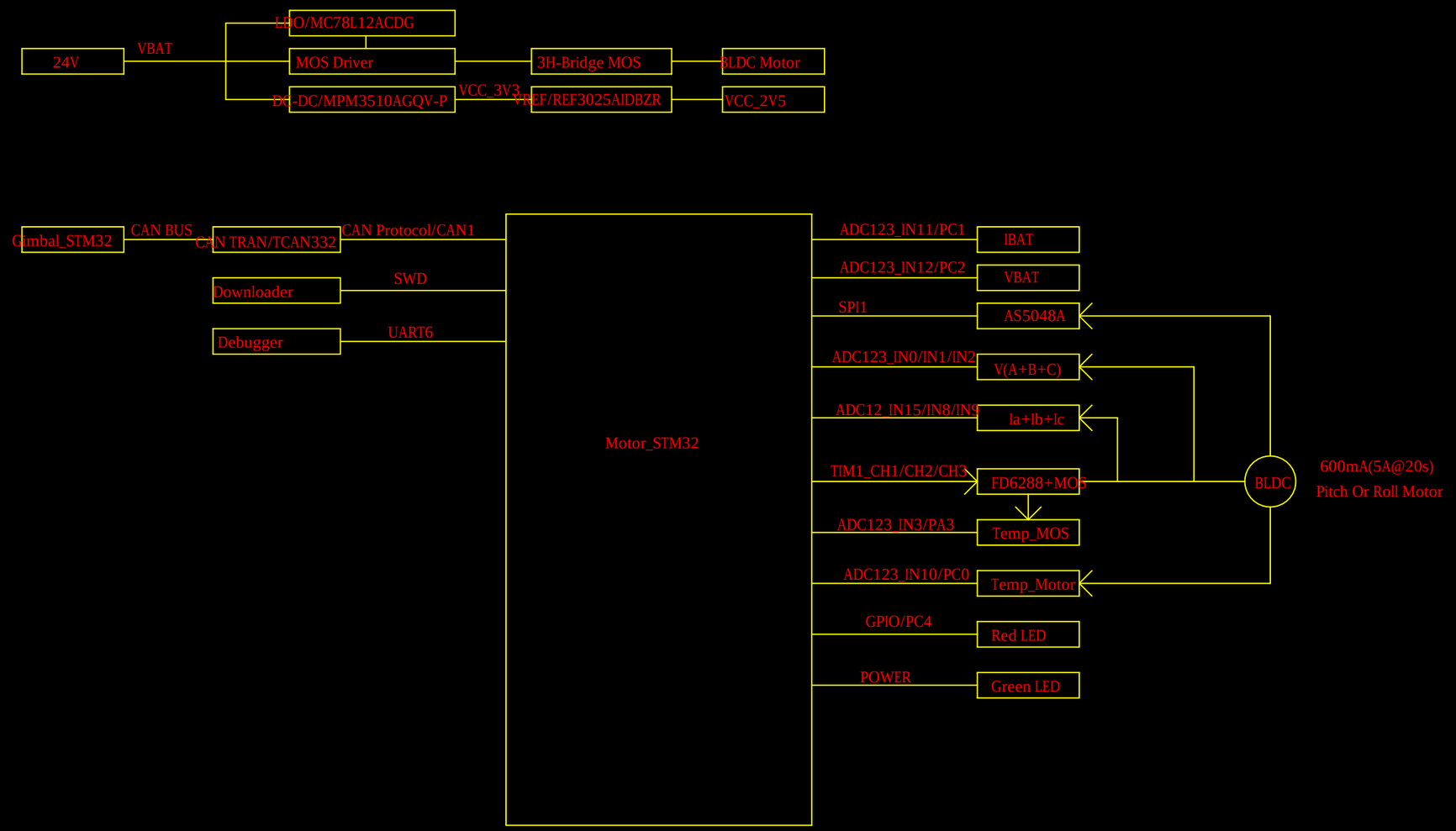

Wednesday, September 07, 2016

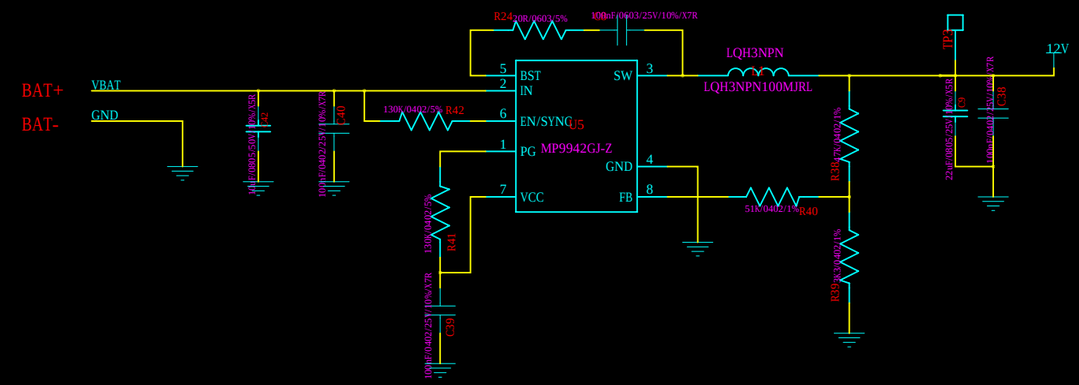

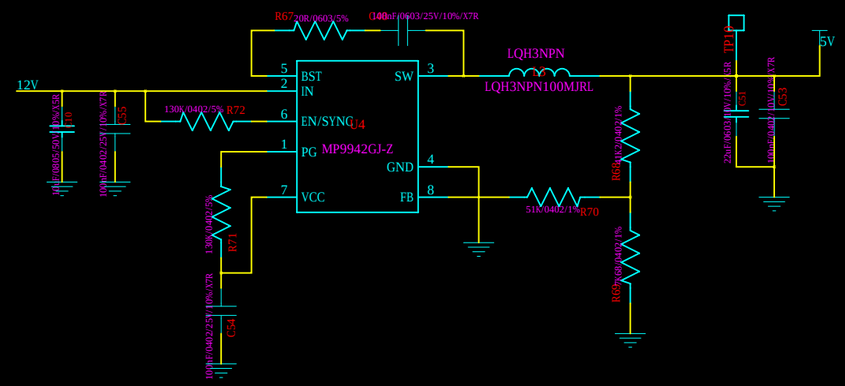

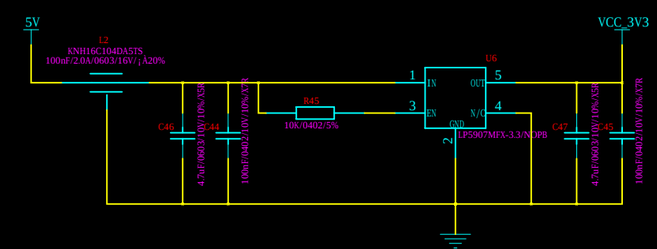

Wednesday, September 07, 2016

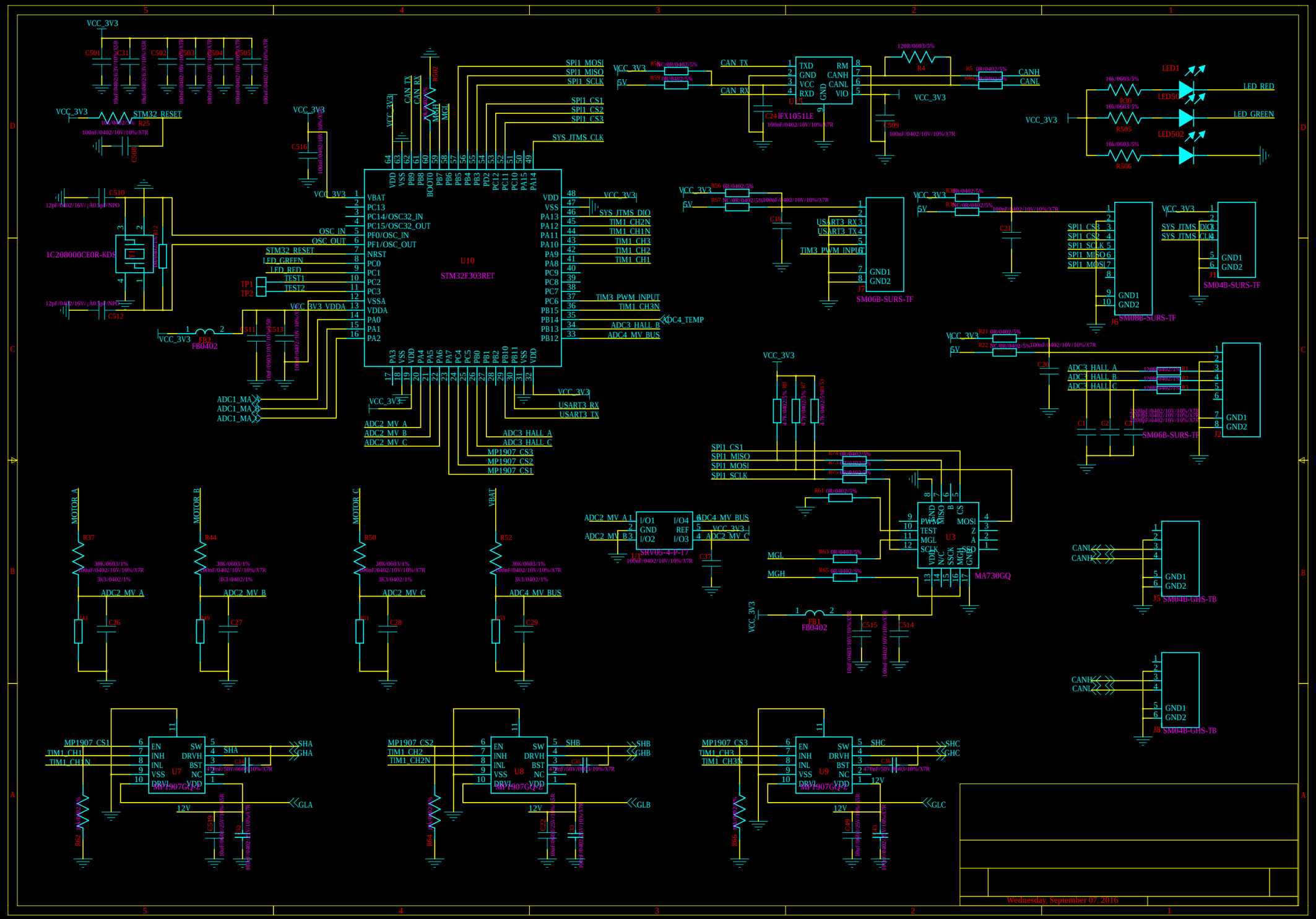
U10
STM32F303RET
U15
IFX1051LE
U3
MA730GQ
U7
U8
U9
MP1907GQ-Z
1C208000CE0R-KDS
SM06B-SURS-TF
SM08B-SURS-TF
SM04B-SURS-TF
SM04B-GHS-TB
SRV05-4-P-T7
FB0402
Wednesday, September 07, 2016

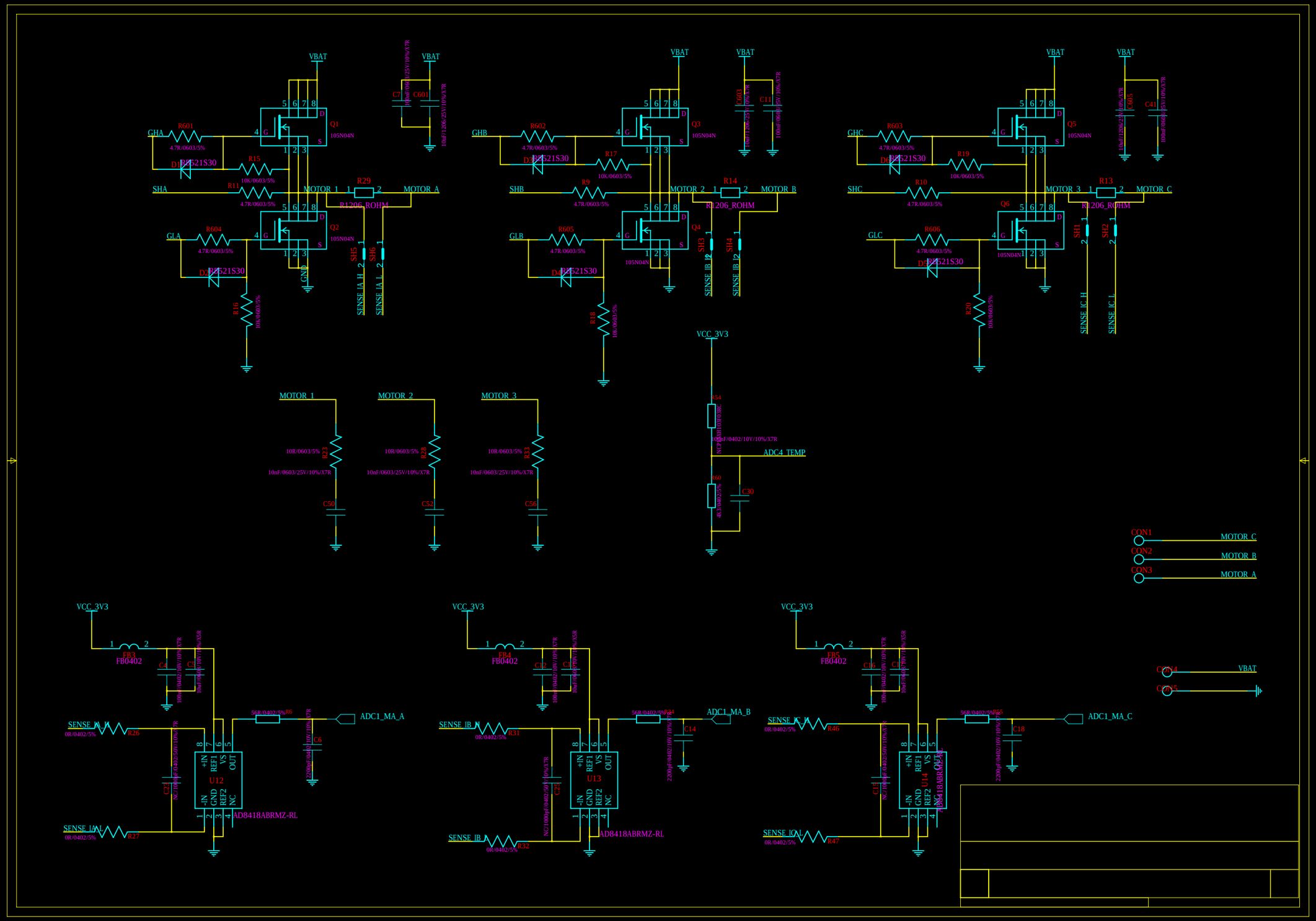
VBAT
GHA
R601
4.7R/0603/5%
D1
BR521S30
R15
10K/0603/5%
SHA
R11
4.7R/0603/5%
MOTOR_1
R29
R1206_ROHM
MOTOR_A
Q1
105N04N
Q2
GLA
R604
D2
R16
10K/0603/5%
GND
SH5
SH6
SENSE_IA_H
SENSE_IA_L
C7
C601
10uF/1206/25V/10%/X7R
GHB
R602
D3
R17
SHB
R9
MOTOR_2
R14
MOTOR_B
Q3
Q4
GLB
R605
D4
R18
SH3
SH4
SENSE_IB_H
SENSE_IB_L
C603
C11
GHC
R603
D6
R19
SHC
R10
MOTOR_3
R13
MOTOR_C
Q5
Q6
GLC
R606
D5
R20
SH1
SH2
SENSE_IC_H
SENSE_IC_L
C605
C41
VCC_3V3
MOTOR_1
MOTOR_2
MOTOR_3
R23
R28
R33
10R/0603/5%
10nF/0603/25V/10%/X7R
C50
C52
C56
R54
R60
4k3/0402/5%
ADC4_TEMP
C30
CON1
CON2
CON3
CON4
CON5
MOTOR_C
MOTOR_B
MOTOR_A
VBAT
FB3
FB4
FB5
FB0402
C1
C2
C12
C13
C16
C17
100nF/0402/10V/10%/X7R
10nF/0402/10V/10%/X5R
SENSE_IA_H
SENSE_IA_L
R26
R27
0R/0402/5%
C21
NC/100pF/0402/50V/10%/X7R
56R/0402/5%
R6
C6
2200pF/0402/10V/10%/X7R
ADC1_MA_A
U12
AD8418ABRMZ-RL
SENSE_IB_H
SENSE_IB_L
R31
R32
C24
U13
ADC1_MA_B
C14
SENSE_IC_H
SENSE_IC_L
R46
R47
C15
U14
ADC1_MA_C
C18