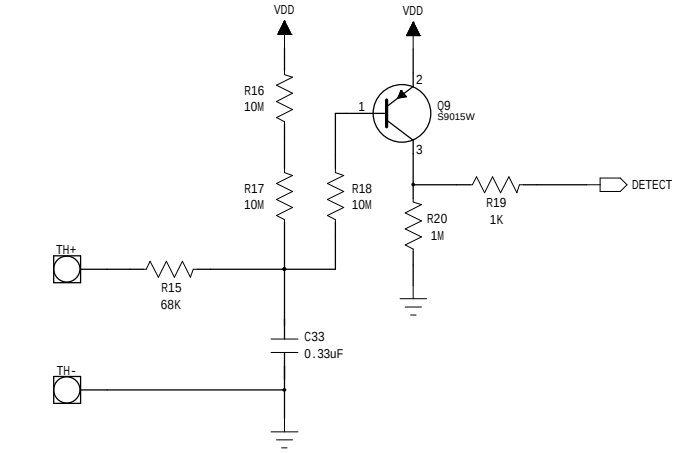

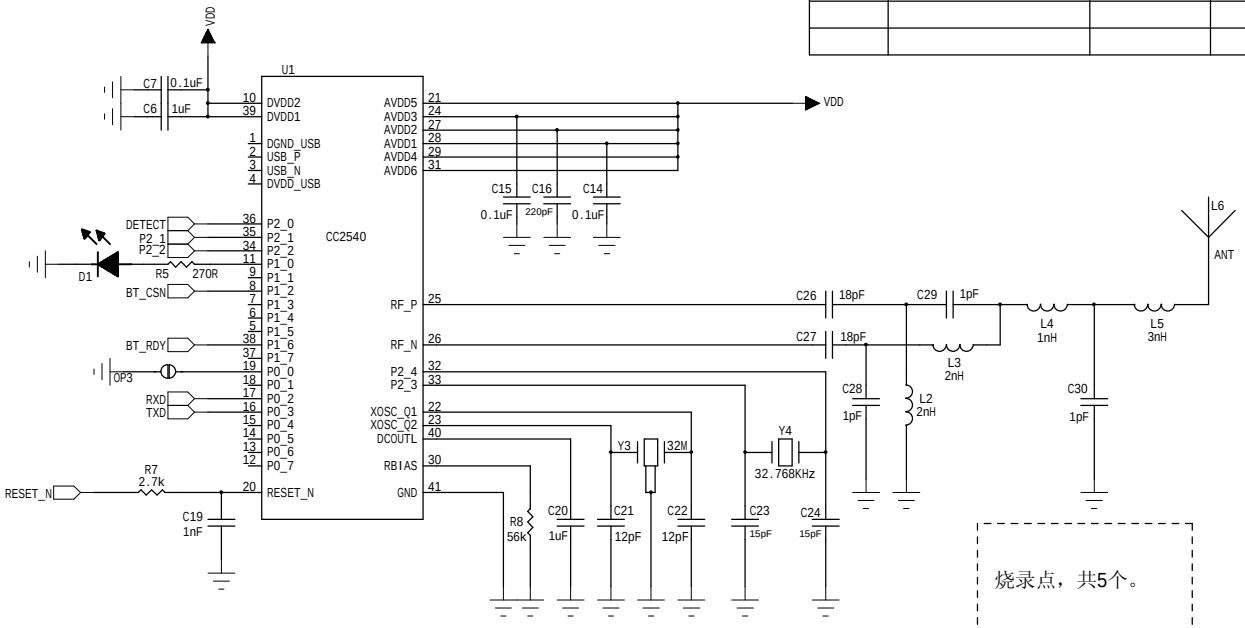

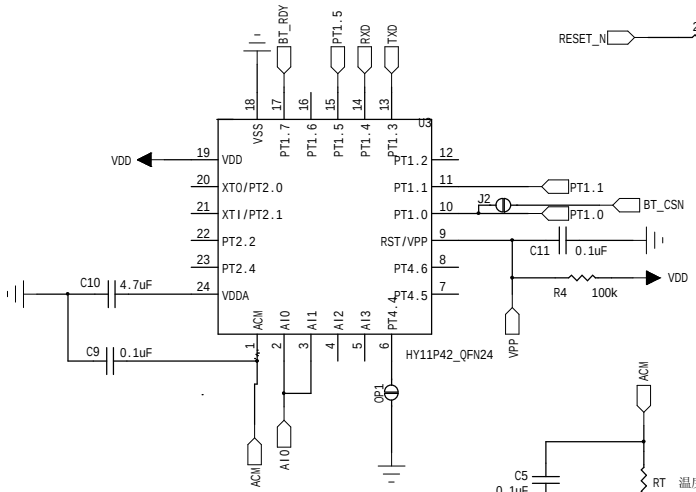

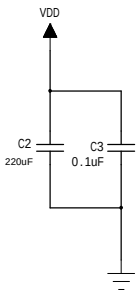

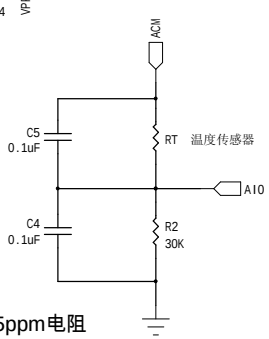

注：R2采用精度0.1%，温漂25ppm电阻

烧录点：

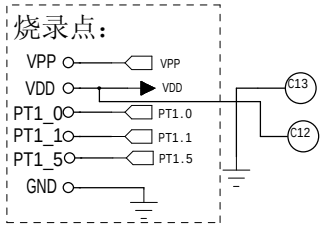

烧录点，共5个。

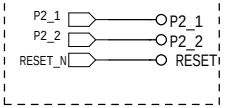

REVISION RECORD

LTR	ECO NO:	APPROVED:	DATE:

COMPANY: 北京宝护科技有限公司			
TITLE: BHT001_V1.1			
DRAWN:	DATED: 2015/02/24		
CHECKED:	DATED:		
QUALITY CONTROL:	DATED:		
RELEASED:	DATED:		
CODE:	SIZE: B	DRAWING NO:	REV:
SCALE:		SHEET: 1 OF 1	