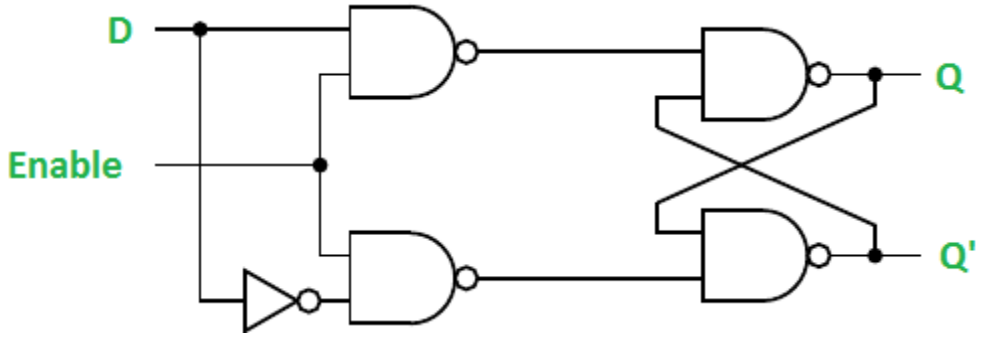
D
Enable
Q
Q'

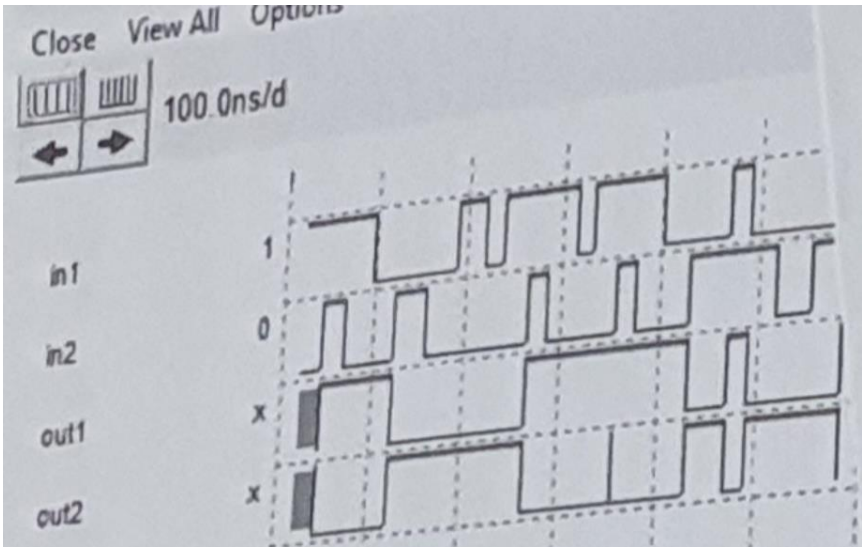
Close
View All
100.0ns/d
in1
in2
out1
out2
1
0
x
x

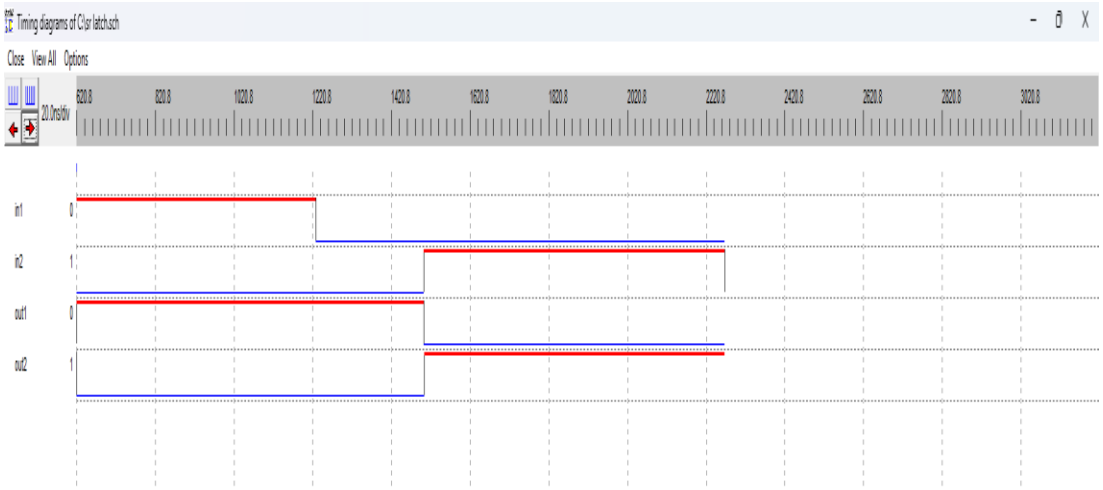
Timing diagrams of C/sr latch.sch
Close
View All
Options
20.0ns/div
in1
in2
out1
out2

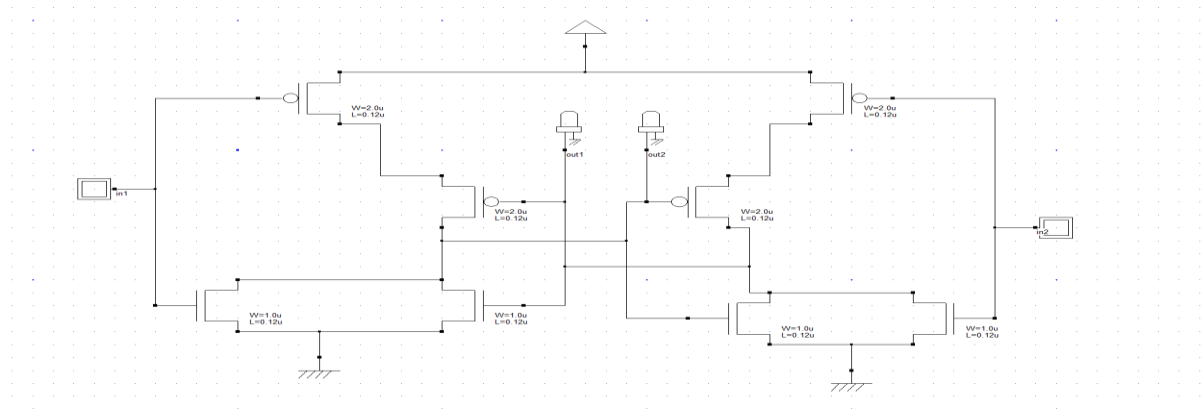
W=2.0u
L=0.12u
out1
out2
in1
in2
W=1.0u
L=0.12u

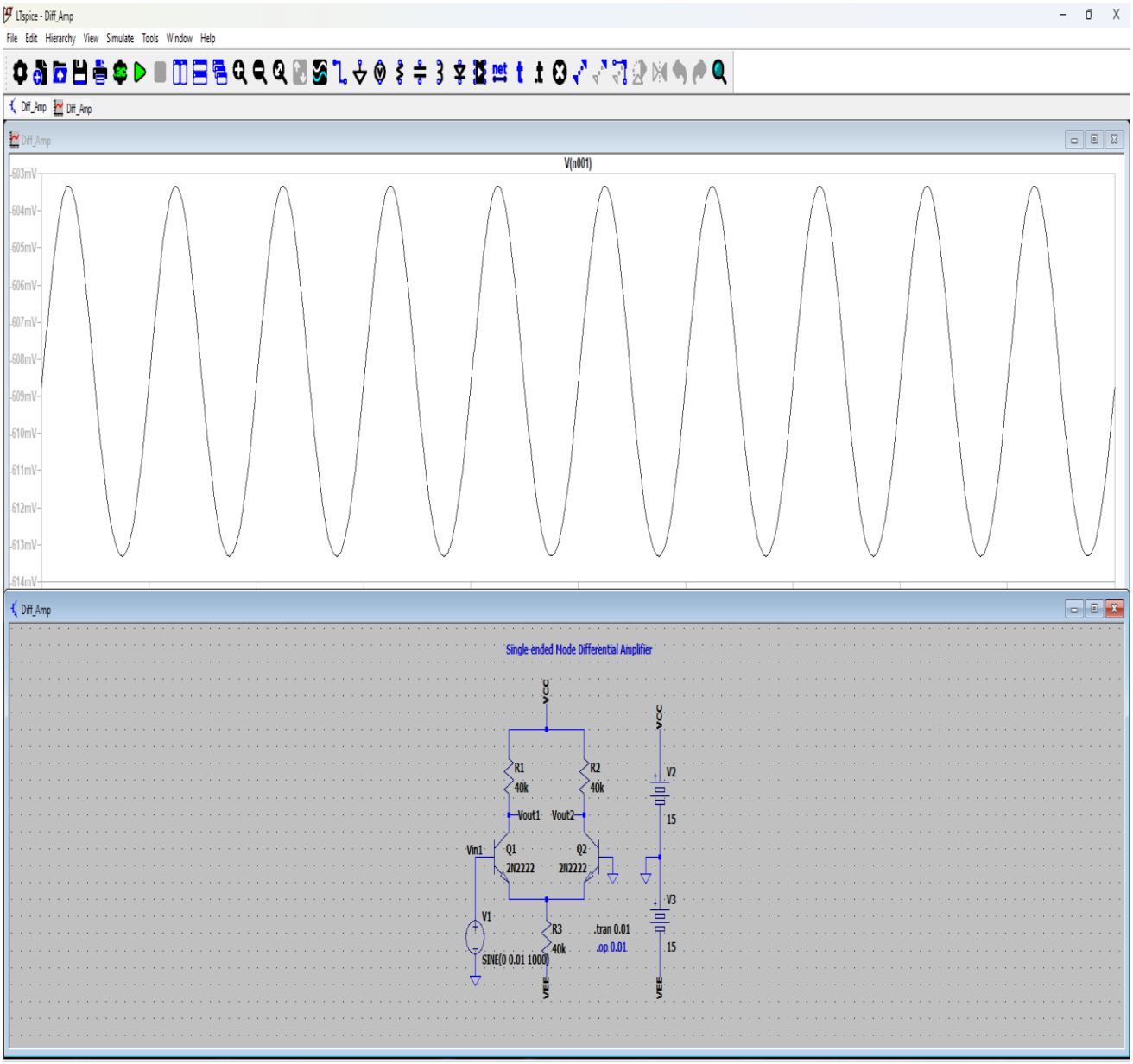
LTspice - Diff_Amp
File Edit Hierarchy View Simulate Tools Window Help
Diff_Amp
V(n001)
503mV
504mV
505mV
506mV
507mV
508mV
509mV
510mV
511mV
512mV
513mV
514mV
Single-ended Mode Differential Amplifier
VCC
R1
40k
R2
40k
Vout1
Vout2
Vin1
Q1
2N2222
Q2
2N2222
V1
SINE(0 0.01 1000)
R3
40k
.tran 0.01
.op 0.01
VEE
V2
15
V3
15

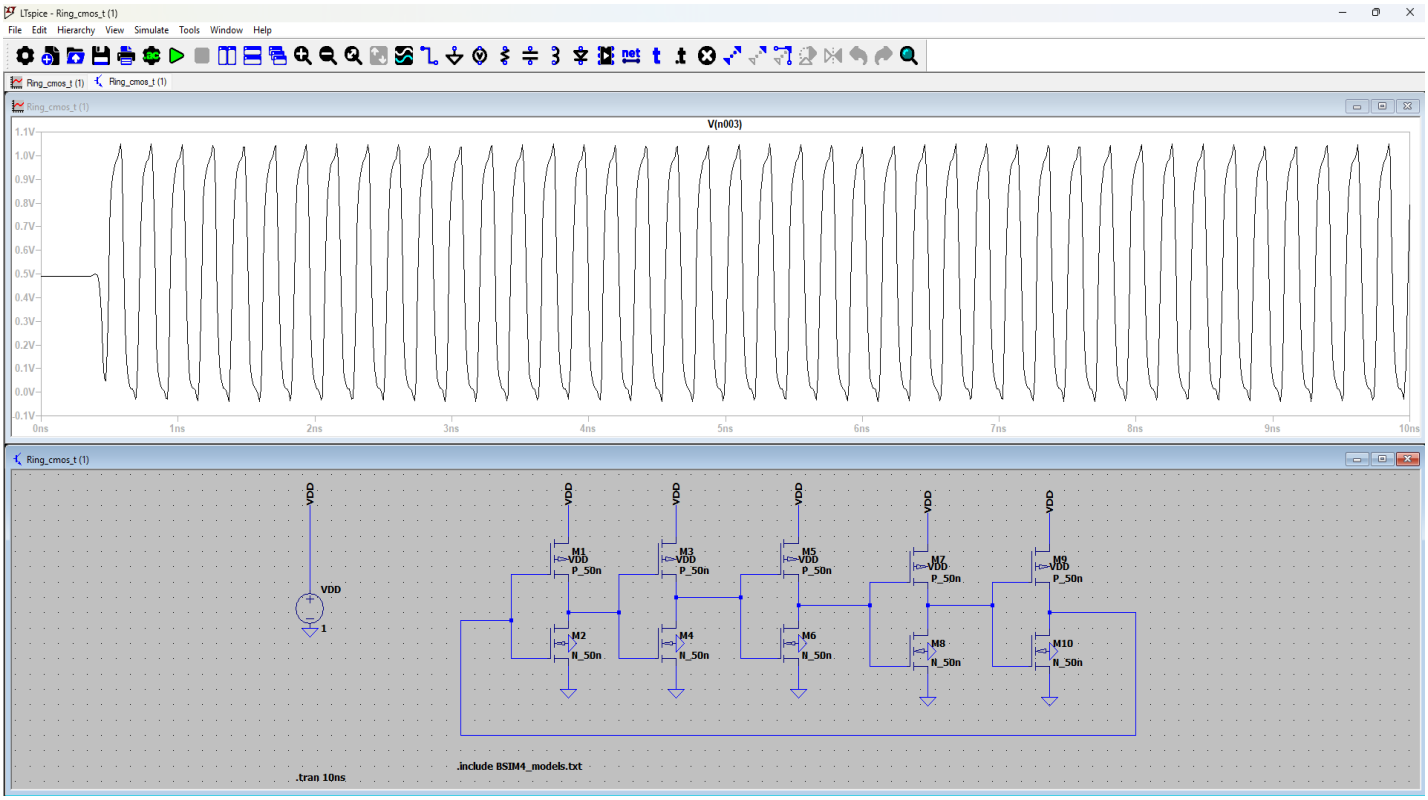
LTspice - Ring_cmos_t (1)
File Edit Hierarchy View Simulate Tools Window Help
Ring_cmos_t (1)
V(n003)
1.1V
1.0V
0.9V
0.8V
0.7V
0.6V
0.5V
0.4V
0.3V
0.2V
0.1V
0.0V
-0.1V
0ns
1ns
2ns
3ns
4ns
5ns
6ns
7ns
8ns
9ns
10ns
VDD
M1 VDD P_50n
M2 N_50n
M3 VDD P_50n
M4 N_50n
M5 VDD P_50n
M6 N_50n
M7 VDD P_50n
M8 N_50n
M9 VDD P_50n
M10 N_50n
.tran 10ns
.include BSIM4_models.txt

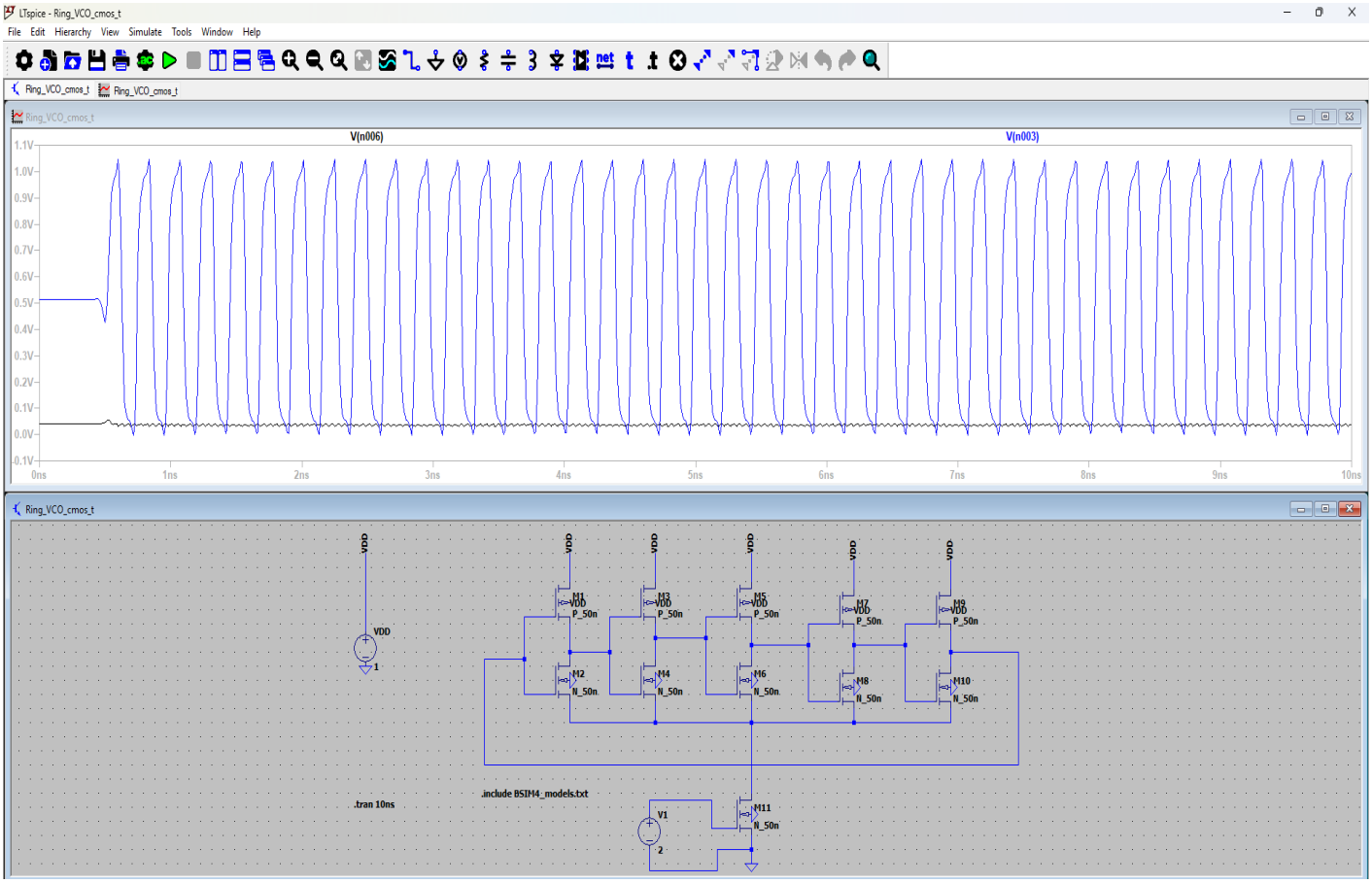
LTspice - Ring_VCO_cmos_t
File Edit Hierarchy View Simulate Tools Window Help
Ring_VCO_cmos_t
V(n006)
V(n003)
1.1V
1.0V
0.9V
0.8V
0.7V
0.6V
0.5V
0.4V
0.3V
0.2V
0.1V
0.0V
-0.1V
0ns
1ns
2ns
3ns
4ns
5ns
6ns
7ns
8ns
9ns
10ns
VDD
M1 VDD P_50n
M2 N_50n
M3 VDD P_50n
M4 N_50n
M5 VDD P_50n
M6 N_50n
M7 VDD P_50n
M8 N_50n
M9 VDD P_50n
M10 N_50n
M11 N_50n
V1
.tran 10ns
.include BSIM4_models.txt

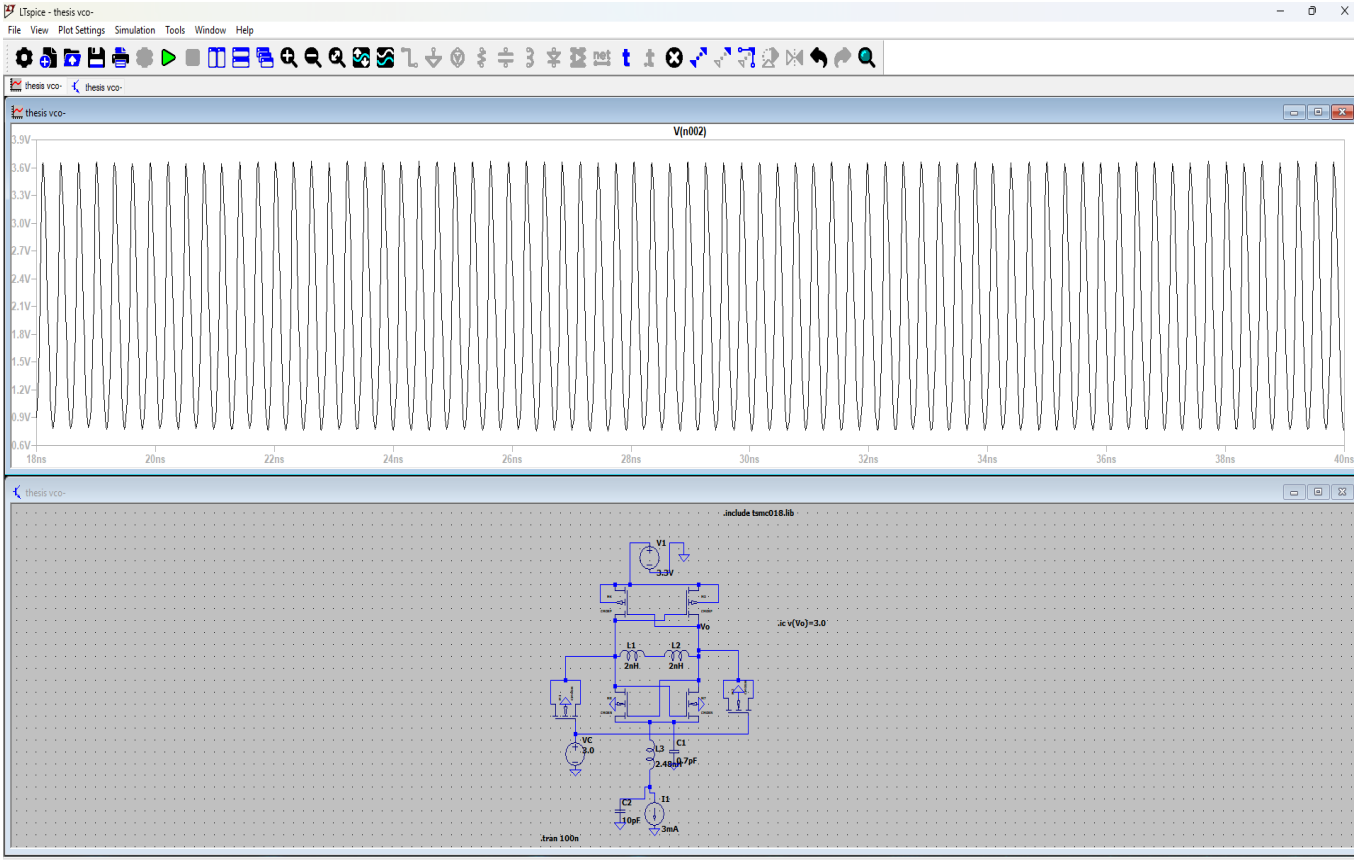
LTspice - thesis vco-
File View Plot Settings Simulation Tools Window Help
thesis vco-
V(n002)
3.9V
3.6V
3.3V
3.0V
2.7V
2.4V
2.1V
1.8V
1.5V
1.2V
0.9V
0.6V
18ns
20ns
22ns
24ns
26ns
28ns
30ns
32ns
34ns
36ns
38ns
40ns
.include tsmc018.lib
V1
3.3V
Vo
.ic v(Vo)=3.0
L1
2nH
L2
2nH
VC
3.0
L3
2.48nH
C1
0.7pF
C2
10pF
I1
3mA
.tran 100n

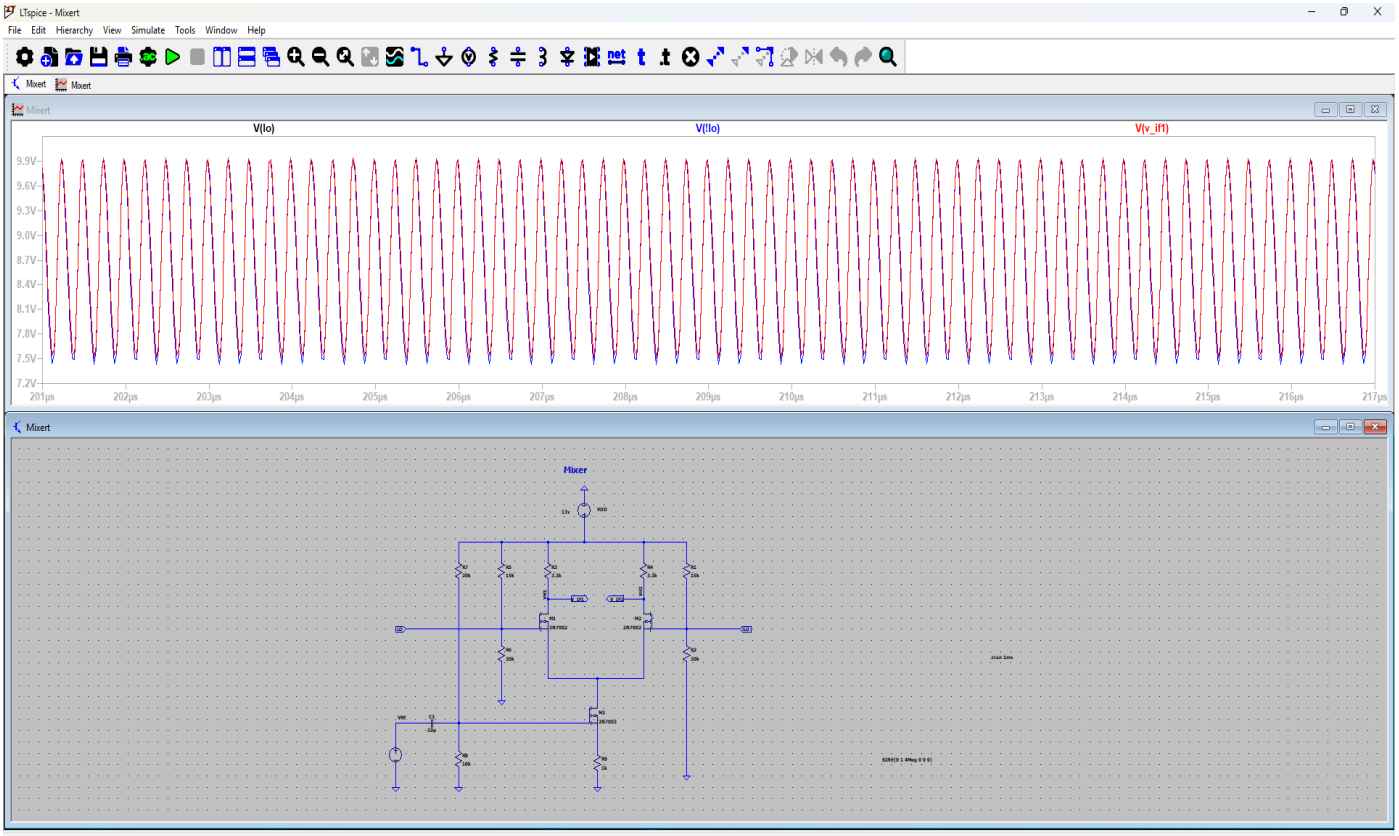
LTspice - Mixert
File Edit Hierarchy View Simulate Tools Window Help
Mixert
V(Io)
V(!Io)
V(v_if1)
9.9V
9.6V
9.3V
9.0V
8.7V
8.4V
8.1V
7.8V
7.5V
7.2V
201µs
202µs
203µs
204µs
205µs
206µs
207µs
208µs
209µs
210µs
211µs
212µs
213µs
214µs
215µs
216µs
217µs
Mixert

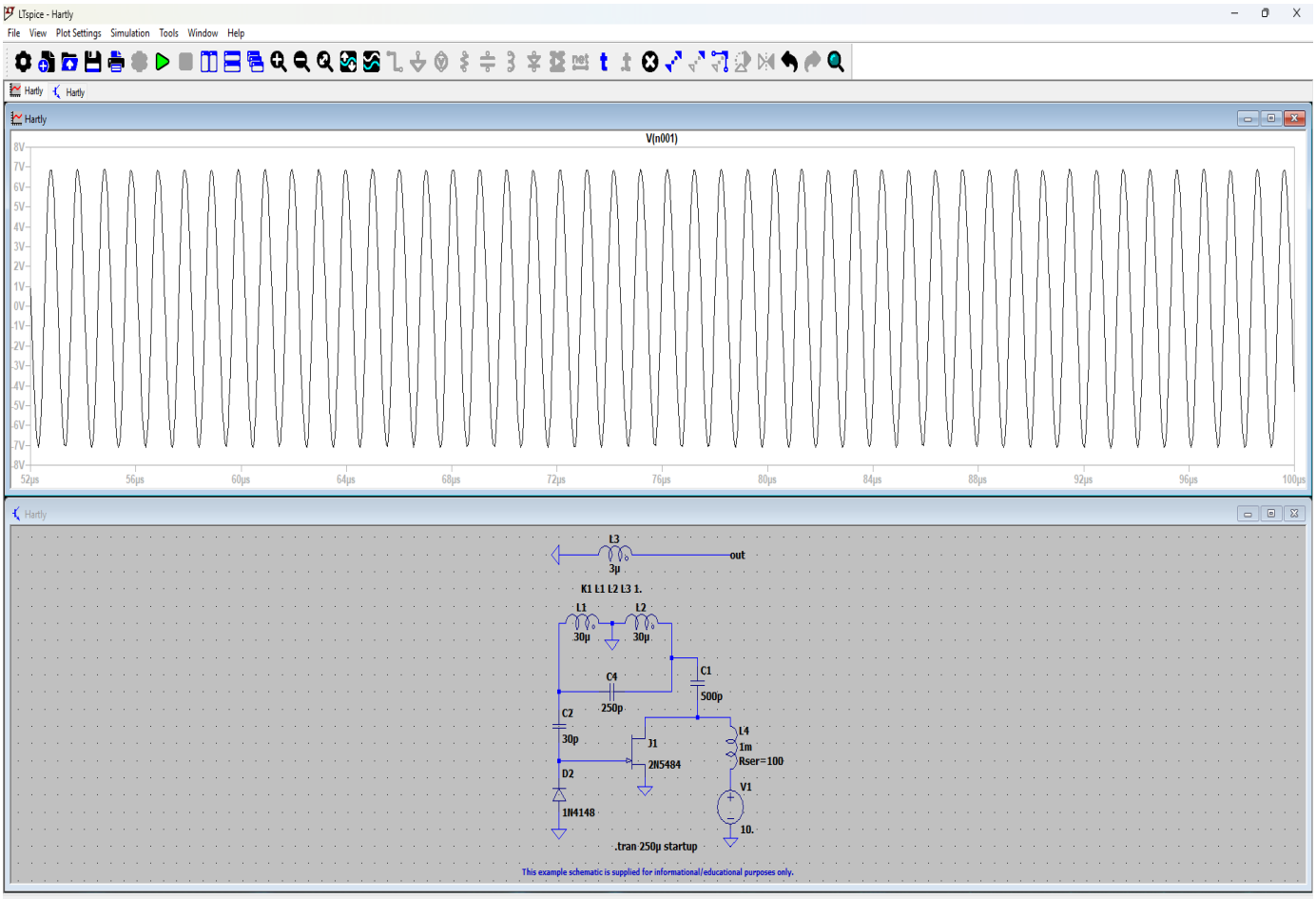
LTspice - Hartly
File View Plot Settings Simulation Tools Window Help
Hartly
V(n001)
8V
7V
6V
5V
4V
3V
2V
1V
0V
-1V
-2V
-3V
-4V
-5V
-6V
-7V
-8V
52µs
56µs
60µs
64µs
68µs
72µs
76µs
80µs
84µs
88µs
92µs
96µs
100µs
L3
3µ
out
K1 L1 L2 L3 1.
L1
30µ
L2
30µ
C1
500p
C4
250p
C2
30p
J1
2N5484
L4
1m
Rser=100
D2
1N4148
V1
10.
.tran 250µ startup
This example schematic is supplied for informational/educational purposes only.

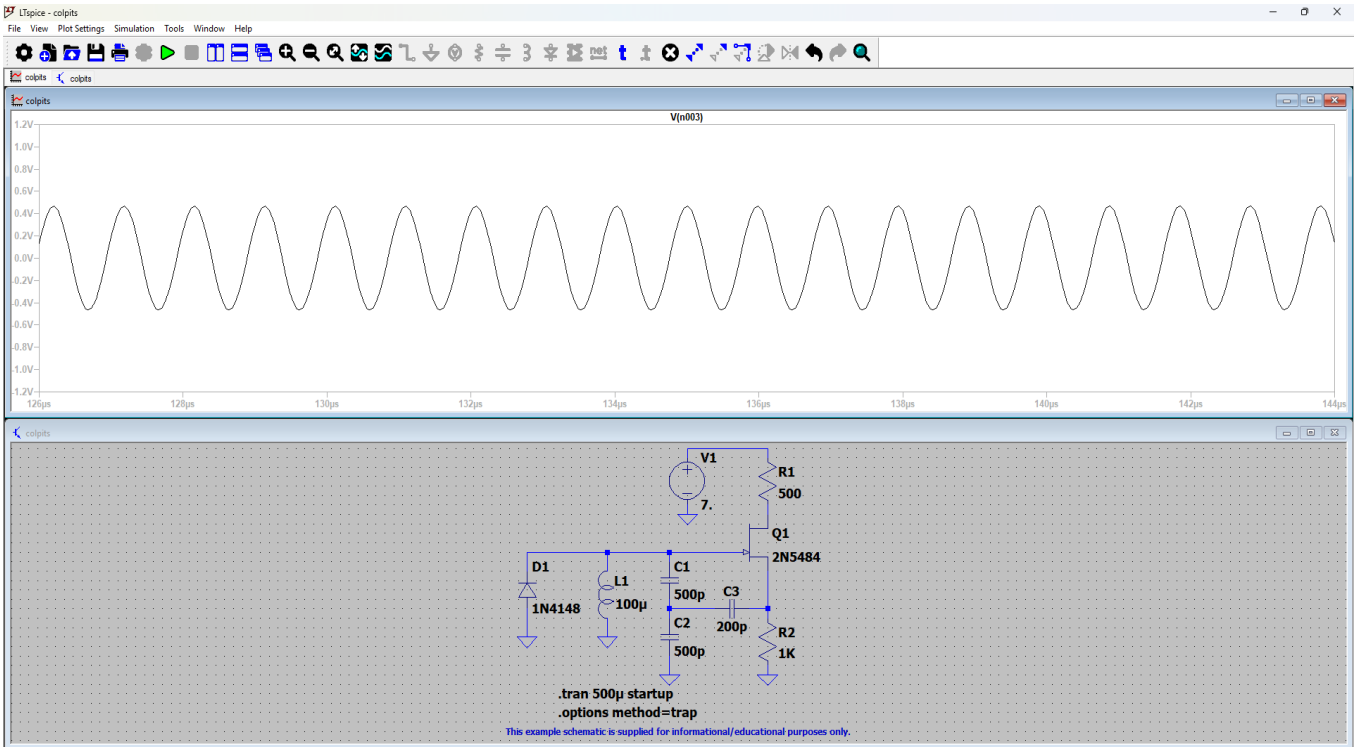
LTspice - colpits
File View Plot Settings Simulation Tools Window Help
colpits
V(n003)
1.2V
1.0V
0.8V
0.6V
0.4V
0.2V
0.0V
-0.2V
-0.4V
-0.6V
-0.8V
-1.0V
-1.2V
126µs
128µs
130µs
132µs
134µs
136µs
138µs
140µs
142µs
144µs
V1
7.
R1
500
Q1
2N5484
D1
1N4148
L1
100µ
C1
500p
C3
200p
C2
500p
R2
1K
.tran 500µ startup
.options method=trap
This example schematic is supplied for informational/educational purposes only.

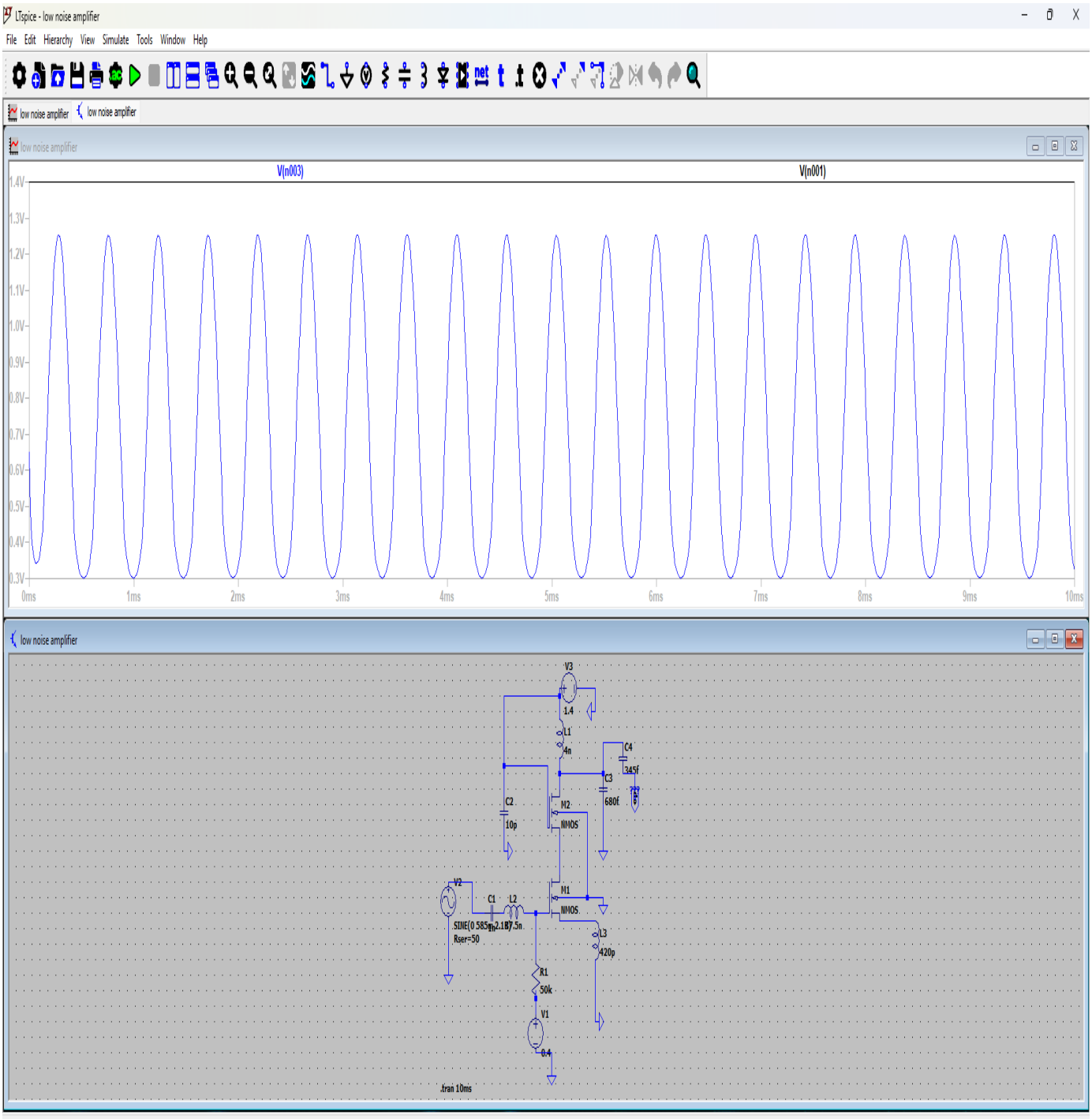
LTspice - low noise amplifier
File Edit Hierarchy View Simulate Tools Window Help
low noise amplifier
low noise amplifier
low noise amplifier
V(n003)
V(n001)
1.4V
1.3V
1.2V
1.1V
1.0V
0.9V
0.8V
0.7V
0.6V
0.5V
0.4V
0.3V
0ms
1ms
2ms
3ms
4ms
5ms
6ms
7ms
8ms
9ms
10ms
low noise amplifier
V3
1.4
L1
4n
C4
345f
C3
680f
C2
10p
M2
NMOS
V2
C1
L2
M1
NMOS
SINE(0 585m 2.1k)
7.5n
Rser=50
L3
420p
R1
50k
V1
0.4
.tran 10ms