FORM TP 2019048

TEST CODE **01207020**

MAY/JUNE 2019

CARIBBEAN EXAMINATIONS COUNCIL

CARIBBEAN SECONDARY EDUCATION CERTIFICATE®
EXAMINATION

BIOLOGY

Paper 02 – General Proficiency

2 hours 30 minutes

READ THE FOLLOWING INSTRUCTIONS CAREFULLY.

1. This paper consists of SIX questions in TWO sections. Answer ALL questions.
2. Write your answers in the spaces provided in this booklet.
3. Do NOT write in the margins.
4. Where appropriate, answers should be illustrated with diagrams.
5. If you need to rewrite any answer and there is not enough space to do so on the original page, you must use the extra lined page(s) provided at the back of this booklet. **Remember to draw a line through your original answer.**
6. **If you use the extra page(s), you MUST write the question number clearly in the box provided at the top of the extra page(s) and, where relevant, include the question part beside the answer.**

DO NOT TURN THIS PAGE UNTIL YOU ARE TOLD TO DO SO.

Copyright © 2018 Caribbean Examinations Council
All rights reserved.

"*"Barcode Area"*"
Sequential Bar Code

SECTION A

Answer ALL questions in this section.

1. (a) Figure 1 shows apparatus that was set up to measure the rate of transpiration of a potted plant located in a room beside an open window, over 12-hour period.

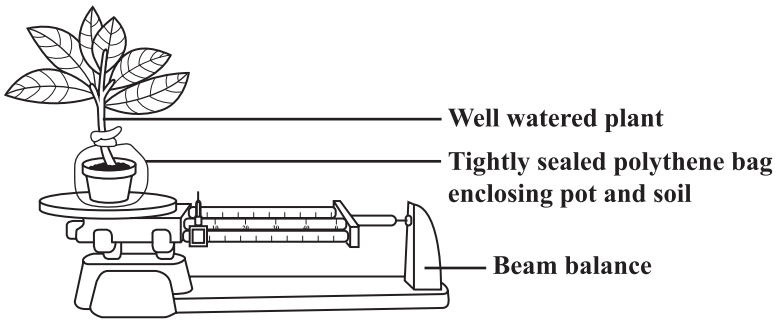

Figure 1. Apparatus to measure rate of transpiration

(i) Describe the procedure that uses the apparatus shown in Figure 1 to investigate the rate of transpiration of the potted plant within the 12-hour period.

.....

.....

.....

.....

.....

.....

.....

.....

.....

.....

.....

.....

(4 marks)

GO ON TO THE NEXT PAGE

"*"Barcode Area"*"
Sequential Bar Code

DO NOT WRITE IN THIS AREA
DO NOT WRITE IN THIS AREA
DO NOT WRITE IN THIS AREA

(ii) State ONE precaution that should be taken to ensure that the results are accurate.

.....

.....

(1 mark)

(iii) Suggest TWO factors that may affect the rate of transpiration of the potted plant.

.....

.....

(2 marks)

(b) The graph in Figure 2 was constructed using the results obtained from the investigation in (a) which measured the rate of transpiration over a 12-hour period.

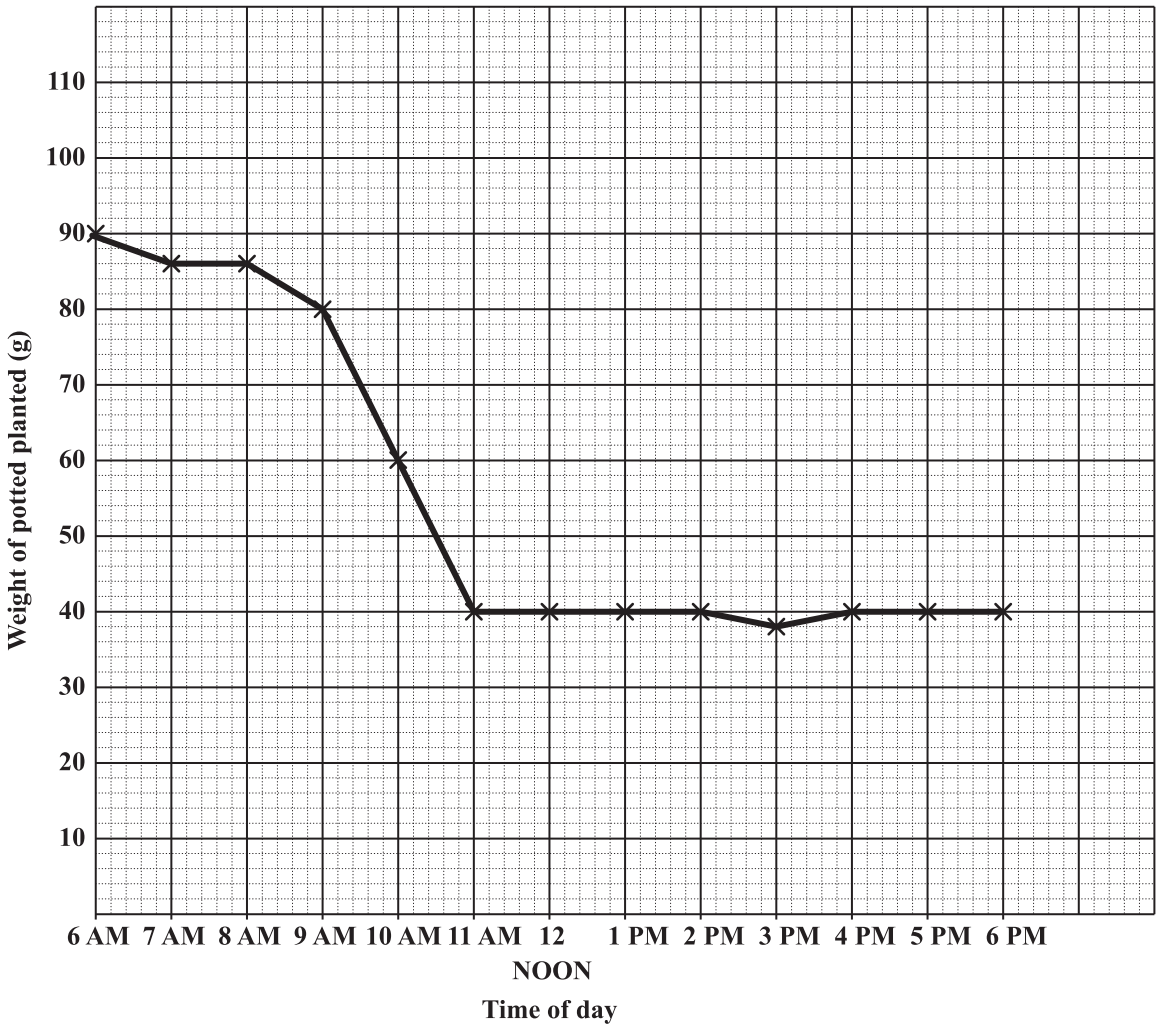

Figure 2. Graph showing the change in mass of a well-watered potted plant over a 12-hour period

GO ON TO THE NEXT PAGE

"*"Barcode Area"*"
Sequential Bar Code

DO NOT WRITE IN THIS AREA
DO NOT WRITE IN THIS AREA
DO NOT WRITE IN THIS AREA

(i) Draw a suitable table and record the results presented in the graph in Figure 2.

(4 marks)

(ii) During what time period was the rate of transpiration highest?

.....

.....

(1 mark)

"*"Barcode Area"*"
Sequential Bar Code

DO NOT WRITE IN THIS AREA
DO NOT WRITE IN THIS AREA
DO NOT WRITE IN THIS AREA

(iii) Suggest TWO reasons for the shape of the graph during EACH of the following time periods:

6 a.m. to 8 a.m.

.....

.....

.....

.....

.....

.....

9 a.m. to 11 a.m.

.....

.....

.....

.....

.....

.....

12 noon to 2 p.m.

.....

.....

.....

.....

.....

.....

(6 marks)

"*"Barcode Area"*"
Sequential Bar Code

DO NOT WRITE IN THIS AREA
DO NOT WRITE IN THIS AREA
DO NOT WRITE IN THIS AREA

(c) (i) Discuss how transpiration helps plants to move water from their roots to their leaves.

.....

.....

.....

.....

.....

.....

.....

.....

(3 marks)

(ii) While absorbing water from the soil, plants absorb mineral salts such as magnesium, calcium and nitrogen. State ONE role of magnesium and ONE role of calcium in plants.

Magnesium

.....

Calcium

.....

(2 marks)

(iii) Nitrogen is used by plants to make protein. Suggest TWO reasons why plants need protein.

.....

.....

.....

.....

(2 marks)

Total 25 marks

"*"Barcode Area"*"
Sequential Bar Code

DO NOT WRITE IN THIS AREA
DO NOT WRITE IN THIS AREA
DO NOT WRITE IN THIS AREA

2. Figure 3 is a diagram of the carbon cycle.

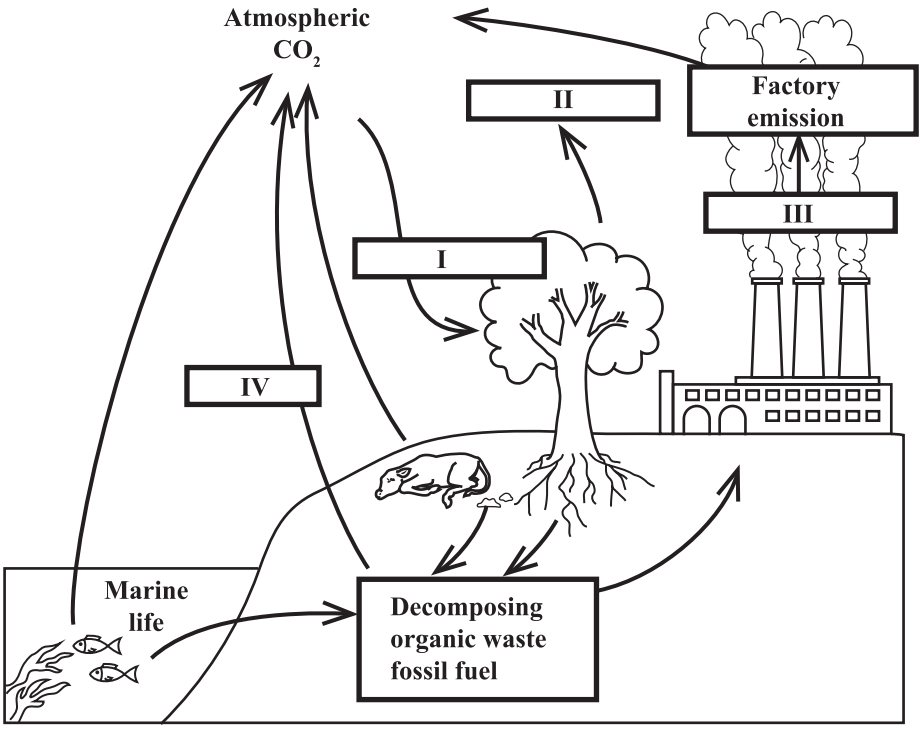

Figure 3. The carbon cycle

(a) State the name of the processes numbered I to IV.

I .....

II .....

III .....

IV .....

(4 marks)

(b) (i) Name ONE type of organism responsible for decomposing organic waste.

.....

(1 mark)

"*"Barcode Area"*"
Sequential Bar Code

DO NOT WRITE IN THIS AREA
DO NOT WRITE IN THIS AREA
DO NOT WRITE IN THIS AREA

(ii) Explain TWO ways in which the type of nutrition carried out by the organism named in (b) (i) is different from that carried out by plants.

.....

.....

.....

.....

.....

.....

.....

.....

(4 marks)

(iii) State TWO reasons why the type of organism named in (b) (i) is important in an ecosystem.

.....

.....

.....

.....

(2 marks)

(c) (i) Suggest TWO reasons why carbon dioxide is described as a greenhouse gas.

.....

.....

.....

.....

.....

.....

(2 marks)

"*"Barcode Area"*"
Sequential Bar Code

DO NOT WRITE IN THIS AREA
DO NOT WRITE IN THIS AREA
DO NOT WRITE IN THIS AREA

(ii) With reference to the carbon cycle, suggest TWO strategies individuals can use to reduce the amount of carbon dioxide in the atmosphere.

.....

.....

.....

.....

(2 marks)

Total 15 marks

"*"Barcode Area"*"
Sequential Bar Code

DO NOT WRITE IN THIS AREA
DO NOT WRITE IN THIS AREA
DO NOT WRITE IN THIS AREA

3. (a) Figure 4 shows a diagram of the human respiratory system. Label, on the diagram, the FOUR structures that are directly involved in breathing.

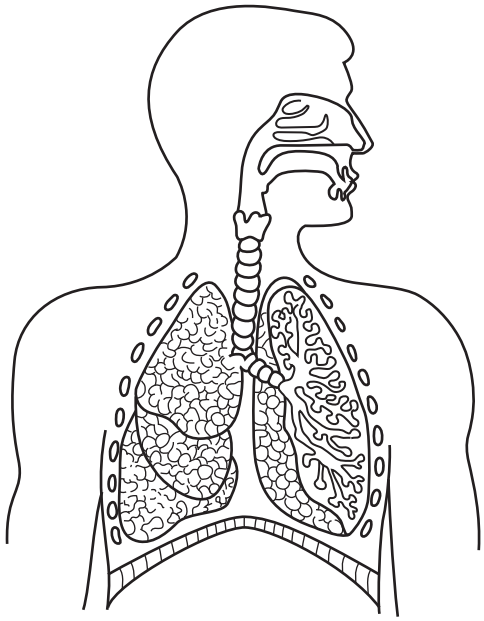

Figure 4. Human respiratory system

(4 marks)

(b) State how any THREE of the structures labelled in (a) function in breathing during inhalation.

.....

.....

.....

.....

.....

.....

.....

.....

.....

.....

.....

.....

(4 marks)

GO ON TO THE NEXT PAGE

"*"Barcode Area"*"
Sequential Bar Code

DO NOT WRITE IN THIS AREA
DO NOT WRITE IN THIS AREA
DO NOT WRITE IN THIS AREA

(c) Explain how any TWO features of the human lung make it an efficient respiratory surface.

.....

.....

.....

.....

.....

.....

.....

.....

.....

.....

(4 marks)

(d) Breathing rate can be affected by several factors. Explain how exercise and smoking may affect a person's breathing rate.

Effect of exercise

.....

.....

.....

.....

Effect of smoking

.....

.....

.....

.....

(4 marks)

Total 15 marks

GO ON TO THE NEXT PAGE

"*"Barcode Area"*"
Sequential Bar Code

DO NOT WRITE IN THIS AREA
DO NOT WRITE IN THIS AREA
DO NOT WRITE IN THIS AREA

SECTION B

Answer ALL questions.

4. (a) Describe TWO events that occur in EACH of the following stages of meiosis I.

Prophase I

.....

.....

.....

.....

.....

.....

Anaphase I

.....

.....

.....

.....

.....

.....

Telophase I

.....

.....

.....

.....

.....

.....

(6 marks)

GO ON TO THE NEXT PAGE

"*"Barcode Area"*"
Sequential Bar Code

DO NOT WRITE IN THIS AREA
DO NOT WRITE IN THIS AREA
DO NOT WRITE IN THIS AREA

(b) (i) Mutation and sexual reproduction are two processes which can lead to variation in the population of a species. State ONE way in which both processes are similar and TWO ways in which they differ.

.....

.....

.....

.....

.....

.....

.....

.....

.....

(3 marks)

(ii) Explain the difference between variation in a community and variation in a population, and suggest ONE way in which diversity benefits the community.

.....

.....

.....

.....

.....

.....

.....

.....

.....

.....

.....

.....

(4 marks)

GO ON TO THE NEXT PAGE

"*"Barcode Area"*"
Sequential Bar Code

DO NOT WRITE IN THIS AREA
DO NOT WRITE IN THIS AREA
DO NOT WRITE IN THIS AREA

(c) Briefly explain how bacteria may become resistant to antibiotics.

.....

.....

.....

.....

.....

.....

(2 marks)

Total 15 marks

"*"Barcode Area"*"
Sequential Bar Code

DO NOT WRITE IN THIS AREA
DO NOT WRITE IN THIS AREA
DO NOT WRITE IN THIS AREA

DO NOT WRITE IN THIS AREA DO NOT WRITE IN THIS AREA DO NOT WRITE IN THIS AREA

5. (a) Describe the location and structure of the normal human female reproductive system.

.....

.....

.....

.....

.....

.....

.....

.....

.....

.....

.....

.....

(6 marks)

(b) A newly married couple wants to delay having children for a few years. Suggest ONE temporary contraceptive method that the couple could use to prevent pregnancy at EACH of the following stages.

Preventing fertilization

.....

.....

Preventing ovulation

.....

.....

Preventing implantation

.....

.....

(3 marks)

GO ON TO THE NEXT PAGE

"*"Barcode Area"*"
Sequential Bar Code

(c) Explain how EACH contraceptive method suggested in (b) works to prevent pregnancy at each of the following stages.

Preventing fertilization

.....

.....

.....

.....

Preventing ovulation

.....

.....

.....

.....

Preventing implantation

.....

.....

.....

.....

(6 marks)

Total 15 marks

"*"Barcode Area"*"
Sequential Bar Code

DO NOT WRITE IN THIS AREA
DO NOT WRITE IN THIS AREA
DO NOT WRITE IN THIS AREA

DO NOT WRITE IN THIS AREA
DO NOT WRITE IN THIS AREA
DO NOT WRITE IN THIS AREA

6. (a) State the name of the final products of digestion for EACH of the following types of nutrients.

Carbohydrate

.....

Protein

.....

Fat/lipid

.....

(3 marks)

(b) In addition to the macronutrients in (a), list three other types of nutrients in a diet that would promote the maintenance of good health.

.....

.....

.....

(3 marks)

"*"Barcode Area"*"
Sequential Bar Code

(c) (i) Mary is a diabetic but her husband Marvin is not. Explain how the concentration of sugar in Marvin's blood is kept within the normal range several hours before AND after he eats a carbohydrate meal.

Before a carbohydrate meal

.....

.....

.....

.....

.....

.....

.....

.....

After a carbohydrate meal

.....

.....

.....

.....

.....

.....

.....

.....

(6 marks)

"*"Barcode Area"*"
Sequential Bar Code

DO NOT WRITE IN THIS AREA
DO NOT WRITE IN THIS AREA
DO NOT WRITE IN THIS AREA

(ii) Explain why Mary is advised to limit her consumption of simple carbohydrates.

.....

.....

.....

.....

.....

.....

(3 marks)

Total 15 marks

END OF TEST

IF YOU FINISH BEFORE TIME IS CALLED, CHECK YOUR WORK ON THIS TEST.

"*"Barcode Area"*"
Sequential Bar Code

DO NOT WRITE IN THIS AREA
DO NOT WRITE IN THIS AREA
DO NOT WRITE IN THIS AREA