FORM TP 2018051

TEST CODE **01212020**

MAY/JUNE 2018

CARIBBEAN EXAMINATIONS COUNCIL

CARIBBEAN SECONDARY EDUCATION CERTIFICATE®
EXAMINATION

CHEMISTRY

Paper 02 – General Proficiency

2 hours 30 minutes

READ THE FOLLOWING INSTRUCTIONS CAREFULLY.

1. This paper consists of SIX questions in TWO sections. Answer ALL questions.
2. Write your answers in the spaces provided in this booklet.
3. Do NOT write in the margins.
4. Where appropriate, ALL WORKING MUST BE SHOWN in this booklet.
5. You may use a silent, non-programmable calculator to answer questions.
6. If you need to rewrite any answer and there is not enough space to do so on the original page, you must use the extra lined page(s) provided at the back of this booklet. **Remember to draw a line through your original answer.**
7. **If you use the extra page(s) you MUST write the question number clearly in the box provided at the top of the extra page(s) and, where relevant, include the question part beside the answer.**

DO NOT TURN THIS PAGE UNTIL YOU ARE TOLD TO DO SO.

Copyright © 2017 Caribbean Examinations Council
All rights reserved.

"*"Barcode Area"*"
Sequential Bar Code

SECTION A

Answer ALL questions in this section.

DO NOT spend more than 30 minutes on Question 1.

1. Sally performed an experiment which consisted of a series of six tests to investigate the effect of temperature on the rate of reaction. The same mass of calcium carbonate, $CaCO_3$, chips was allowed to react with an excess of dilute hydrochloric acid at different temperatures. Carbon dioxide gas was produced from the reaction and the time taken to collect 50 cm^3 of this gas for EACH test is shown in Figure 1.

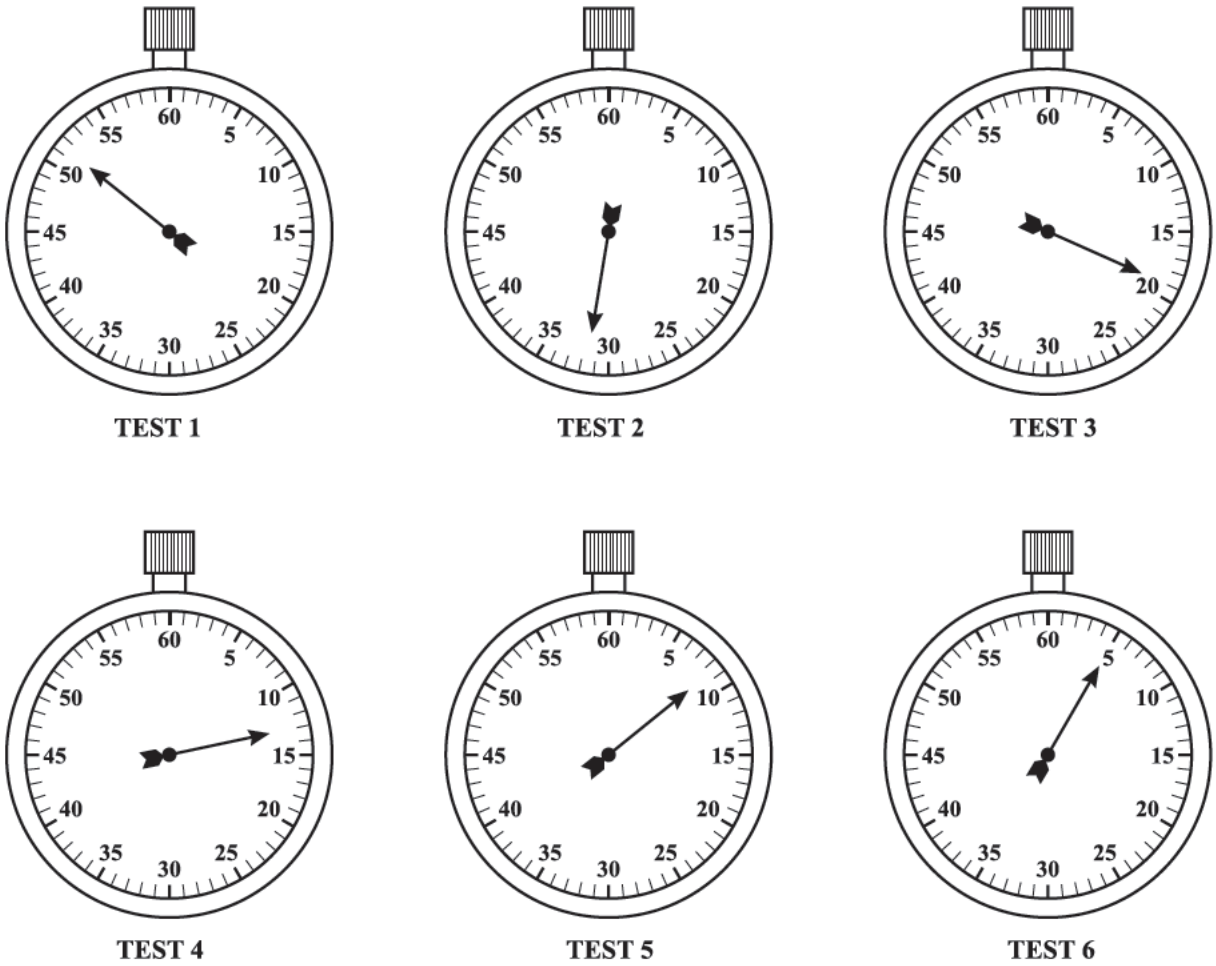

Figure 1. Time taken to collect 50 cm^3 of carbon dioxide

"*"Barcode Area"*"
Sequential Bar Code

DO NOT WRITE IN THIS AREA
DO NOT WRITE IN THIS AREA
DO NOT WRITE IN THIS AREA

DO NOT WRITE IN THIS AREA DO NOT WRITE IN THIS AREA DO NOT WRITE IN THIS AREA

Materials:

The six tests were carried out at different temperatures using the following reagents:

1.0 g $CaCO_3$ chips
100 cm^3 of 1.0 mol dm^{-3} hydrochloric acid

(a) Define 'rate of reaction'.

.....

.....

(1 mark)

(b) (i) Write a balanced chemical equation for the reaction between calcium carbonate and hydrochloric acid.

.....

.....

(2 marks)

(ii) Calculate the volume of carbon dioxide that would be produced at RTP from 1.0 g of $CaCO_3$ chips.

[RMM: $CaCO_3$ = 100; 1 mole of a gas occupies 24 000 cm^3 at RTP.]

.....

.....

.....

.....

.....

.....

.....

.....

.....

.....

(3 marks)

"*"Barcode Area"*"
Sequential Bar Code

(c) (i) From the stopwatches displayed in Figure 1 **on page 4**, record the times taken for the carbon dioxide gas to be collected in the appropriate spaces in Table 1. The time taken for Test 1 has already been recorded.

TABLE 1: RESULTS AND RECIPROCAL TIMES FOR TEST 1–6

Test	Temperature (°C)	Time Taken (s)	Reciprocal Time (s^{-1})
1	18	51.5	0.019
2	23		
3	28		
4	32		
5	37		
6	43		

(3 marks)

(ii) Calculate the reciprocal times (1/time) and record them to 3 decimal places in the appropriate spaces in Table 1. The reciprocal time for Test 1 has already been calculated. **(4 marks)**

(iii) Using the axes provided in Figure 2 **on page 7**, plot a graph of reciprocal time versus temperature for Tests 1– 6. Draw the best curve through the points. **(5 marks)**

"*"Barcode Area"*"
Sequential Bar Code

DO NOT WRITE IN THIS AREA
DO NOT WRITE IN THIS AREA
DO NOT WRITE IN THIS AREA

DO NOT WRITE IN THIS AREA
DO NOT WRITE IN THIS AREA
DO NOT WRITE IN THIS AREA

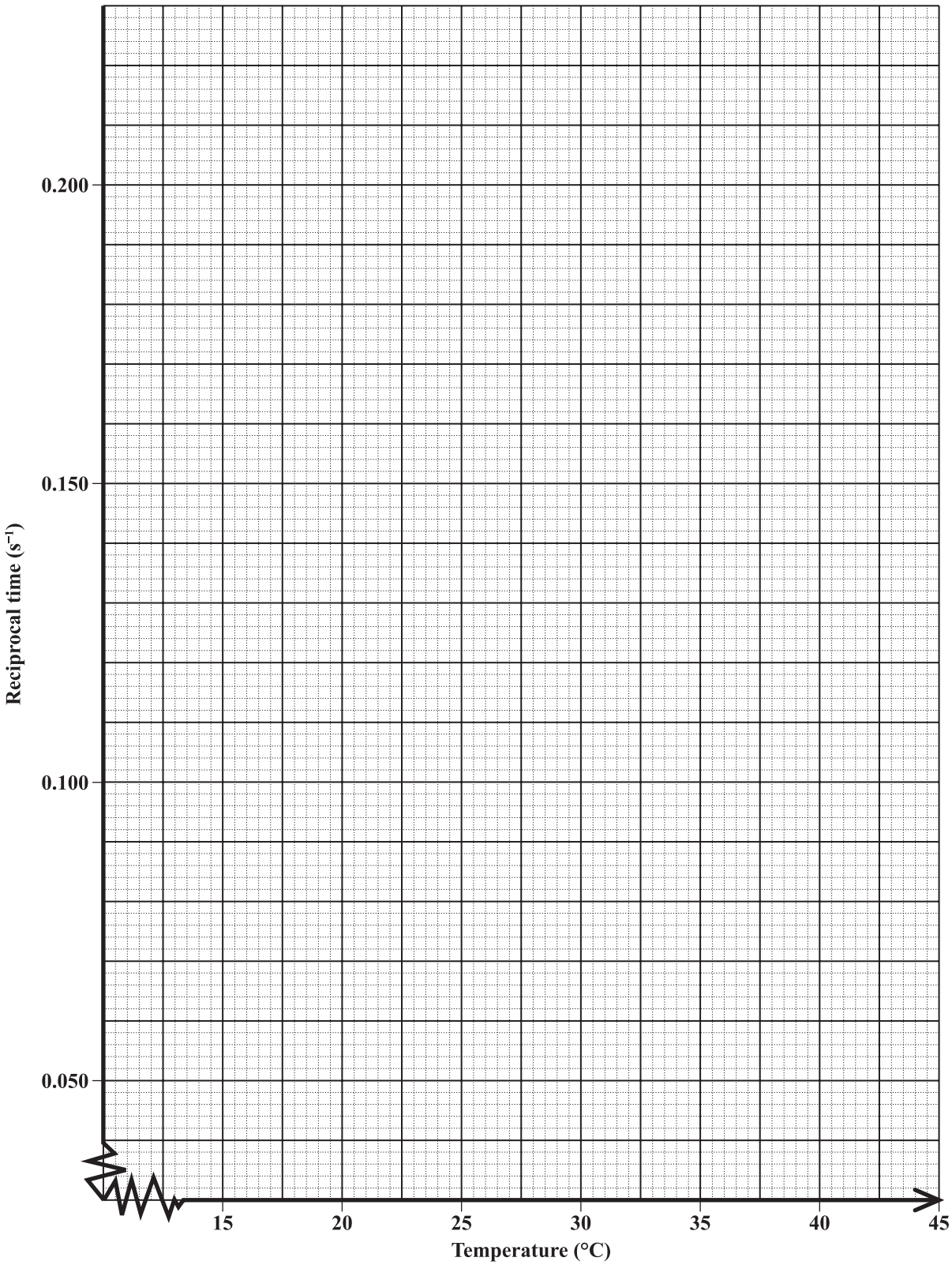

Figure 2. Reciprocal time versus temperature

GO ON TO THE NEXT PAGE

"*"Barcode Area"*"
Sequential Bar Code

(d) (i) Based on the graph drawn in (c) (iii) **on page 7**, deduce the effect that temperature has on the rate of reaction.

.....

.....

(1 mark)

(ii) State TWO reasons that account for the observed effect, given in (d) (i), of temperature on the rate of reaction.

.....

.....

.....

.....

(2 marks)

(e) Use the graph drawn **on page 7** to determine the value of the reciprocal time that would have been obtained if the experiment was carried out at 40 °C.

.....

.....

(2 marks)

(f) Describe a confirmatory test for carbon dioxide.

.....

.....

.....

.....

(2 marks)

Total 25 marks

"*"Barcode Area"*"
Sequential Bar Code

DO NOT WRITE IN THIS AREA
DO NOT WRITE IN THIS AREA
DO NOT WRITE IN THIS AREA

2. (a) The element chlorine, $_{17}Cl$, with electron configuration 2.8.7 has TWO main isotopes, namely chlorine-35, $^{35}_{17}Cl$, and chlorine-37, $^{37}_{17}Cl$.

(i) Define 'isotopes'.

.....

.....

.....

.....

(2 marks)

(ii) Hence, show by calculation that chlorine-35 and chlorine-37 are isotopes.

.....

.....

.....

.....

(2 marks)

(b) Some elements have isotopes that are unstable and radioactive. These are known as radioisotopes. State TWO uses of radioisotopes.

.....

.....

.....

.....

(2 marks)

"*"Barcode Area"*"
Sequential Bar Code

DO NOT WRITE IN THIS AREA
DO NOT WRITE IN THIS AREA
DO NOT WRITE IN THIS AREA

(c) A student, while investigating the reactions of chlorine, bubbles chlorine gas into an aqueous solution of potassium iodide and deduces that the potassium iodide was oxidized because a colour change occured.

(i) Write a balanced chemical IONIC equation for the reaction that is responsible for the colour change.

.....

.....

(2 marks)

(ii) Describe the colour change that the student observed.

.....

.....

(2 marks)

(d) Sulfur is an element that is bright yellow in colour, and burns in air to give an acidic gas with a choking smell.

(i) Write a balanced chemical equation, with state symbols, for the burning of sulfur in air.

.....

.....

(2 marks)

(ii) State ONE use of sulfur.

.....

.....

(1 mark)

(iii) Sulfur is in the same group as oxygen and so undergoes similar reactions. Write a balanced chemical equation, with state symbols, for the reaction of magnesium with sulfur.

.....

.....

(2 marks)

Total 15 marks

"*"Barcode Area"*"
Sequential Bar Code

DO NOT WRITE IN THIS AREA
DO NOT WRITE IN THIS AREA
DO NOT WRITE IN THIS AREA

DO NOT WRITE IN THIS AREA DO NOT WRITE IN THIS AREA DO NOT WRITE IN THIS AREA

3. Compounds X and Y are simple hydrocarbons. Compound X has the general formula C_nH_{2n+2} with n = 4 and Compound Y has the general formula C_nH_{2n} with n = 3.

(a) State the homologous series to which EACH compound belongs.

Compound X .....

Compound Y .....

(2 marks)

(b) State one use EACH of Compound X and Compound Y.

Compound X .....

Compound Y .....

(2 marks)

(c) Draw the FULLY DISPLAYED formulae to show the structure of Compound X and Compound Y.

Structure of Compound X	**Structure of Compound Y**

(4 marks)

"*"Barcode Area"*"
Sequential Bar Code

(d) Compound Y reacts with water to form an alcohol.

(i) Draw the structure of the alcohol formed from Compound Y.

(2 marks)

(ii) State the reagents and reaction conditions for the conversion of Compound Y to the alcohol.

Reagents .....

.....

Reaction conditions .....

.....

.....

(2 marks)

(e) Ethanol reacts with ethanoic acid to produce a sweet-smelling oily liquid, an ester. State the name of the ester formed.

.....

.....

(1 mark)

(f) Write the full equation for the reaction between ethanol and ethanoic acid.

.....

.....

(2 marks)

Total 15 marks

GO ON TO THE NEXT PAGE

"*"Barcode Area"*"
Sequential Bar Code

DO NOT WRITE IN THIS AREA
DO NOT WRITE IN THIS AREA
DO NOT WRITE IN THIS AREA

DO NOT WRITE IN THIS AREA
DO NOT WRITE IN THIS AREA
DO NOT WRITE IN THIS AREA

SECTION B

Answer ALL questions in this section.

4. The circuit in Figure 3 can be used to test if a substance conducts electricity.

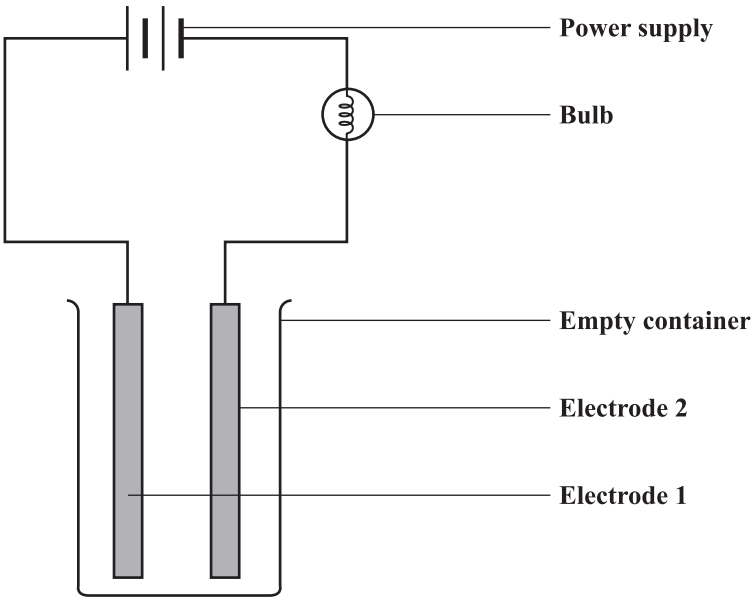

Figure 3. Diagram of a circuit

(a) Define 'electrolysis'.

.....

.....

.....

.....

(2 marks)

(b) Describe the effect that EACH of the following substances will have on the bulb, when the substance is placed in the empty container in Figure 3. State a reason for your answer for EACH substance.

(i) Solid sodium chloride

Effect .....

.....

Reason .....

.....

(2 marks)

(ii) 1 mol dm^{-3} hydrochloric acid

Effect .....

.....

Reason .....

.....

(2 marks)

(iii) Ethanol

Effect .....

.....

Reason .....

.....

(2 marks)

(iv) A bar of lead touching the electrodes

Effect .....

.....

Reason .....

.....

(2 marks)

GO ON TO THE NEXT PAGE

"*"Barcode Area"*"
Sequential Bar Code

DO NOT WRITE IN THIS AREA
DO NOT WRITE IN THIS AREA
DO NOT WRITE IN THIS AREA

(c) A sample of molten lead bromide, $PbBr_2$, is electrolysed for three minutes with a current of 6 amperes. Calculate the mass of lead that is deposited at the cathode, given that two moles of electrons are required to liberate one mole of lead as shown in the following equation:

$$Pb^{2+}(l) + 2e^- \rightarrow Pb(l)$$

[Q = It; RAM: Pb = 207; F = 96 500 C mol^{-1}]

.....

.....

.....

.....

.....

.....

.....

.....

.....

.....

.....

.....

.....

.....

.....

.....

.....

.....

(5 marks)

Total 15 marks

GO ON TO THE NEXT PAGE

"*"Barcode Area"*"
Sequential Bar Code

DO NOT WRITE IN THIS AREA
DO NOT WRITE IN THIS AREA
DO NOT WRITE IN THIS AREA

5. (a) Ethanol, the main ingredient in many alcoholic drinks, is obtained by a process known as fermentation. Describe the process of fermentation. In your description, identify the raw materials and products, and write a relevant chemical equation.

.....

.....

.....

.....

.....

.....

.....

.....

.....

.....

.....

.....

.....

(5 marks)

"*"Barcode Area"*"
Sequential Bar Code

DO NOT WRITE IN THIS AREA
DO NOT WRITE IN THIS AREA
DO NOT WRITE IN THIS AREA

(b) In the production of soaps, the saponification process uses naturally occurring fats and oils as raw materials. The following diagram represents a fat molecule that can be used.

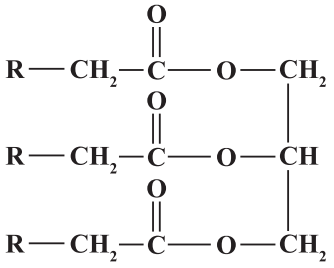

Fat molecule

Briefly describe the soap-making process, stating the necessary reagents and conditions. Based on the structure of the fat molecule shown above, draw the structure of the soap that would be formed during the saponification process.

.....

.....

.....

.....

.....

.....

(4 marks)

"*"Barcode Area"*"
Sequential Bar Code

DO NOT WRITE IN THIS AREA DO NOT WRITE IN THIS AREA DO NOT WRITE IN THIS AREA

(c) There are several different types of polymers, for example, polyalkenes, polyesters, polysaccharides and polyamides.

(i) Based on the following diagrams showing the partial structure of a polymer, deduce the type of polymer shown, and the type of polymerization reaction that took place in EACH case.

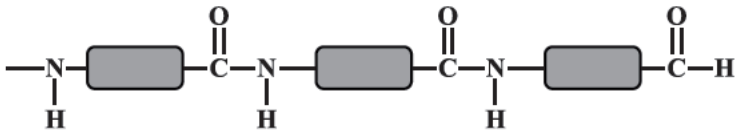

Partial structure of Polymer BB

.....

.....

.....

.....

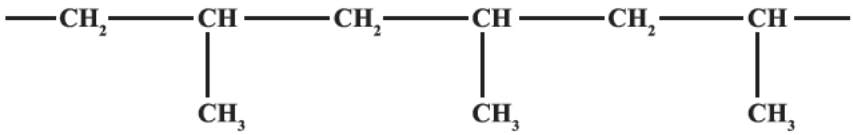

Partial structure of Polymer CC

.....

.....

.....

.....

(4 marks)

"*"Barcode Area"*"
Sequential Bar Code

DO NOT WRITE IN THIS AREA
DO NOT WRITE IN THIS AREA
DO NOT WRITE IN THIS AREA

(ii) Draw the structure of the monomer used to form Polymer CC.

(2 marks)

Total 15 marks

"*"Barcode Area"*"
Sequential Bar Code

DO NOT WRITE IN THIS AREA
DO NOT WRITE IN THIS AREA
DO NOT WRITE IN THIS AREA

6. (a) Many important biological processes in plants and animals depend on the specific roles of certain metal ions.

(i) Farmer Jones reaped a crop of tomatoes and reported that the yield was far below what was expected. Analysis of the soil revealed that there was a deficiency of magnesium. Discuss the importance of magnesium in plant health, and explain how a magnesium deficiency can result in the low yield of tomatoes.

.....

.....

.....

.....

.....

.....

.....

.....

.....

.....

(5 marks)

(ii) State ONE other metal ion which is important to plant health and state the result of its deficiency.

.....

.....

.....

.....

(2 marks)

"*"Barcode Area"*"
Sequential Bar Code

DO NOT WRITE IN THIS AREA
DO NOT WRITE IN THIS AREA
DO NOT WRITE IN THIS AREA

DO NOT WRITE IN THIS AREA DO NOT WRITE IN THIS AREA DO NOT WRITE IN THIS AREA

(b) Many years ago, car exhaust fumes were known to contain compounds of metals and non-metals, which could negatively impact both humans and the environment. Identify ONE metal and ONE nonmetal whose compounds were present in car exhaust fumes. Discuss the effect of these compounds on human health and the environment.

.....

.....

.....

.....

.....

.....

.....

.....

.....

.....

(5 marks)

(c) Define 'green chemistry' and discuss the measures that have been taken to produce a 'greener' automotive fuel.

.....

.....

.....

.....

.....

.....

.....

.....

(3 marks)

Total 15 marks

END OF TEST

IF YOU FINISH BEFORE TIME IS CALLED, CHECK YOUR WORK ON THIS TEST.

"*"Barcode Area"*"
Sequential Bar Code