CARIBBEAN EXAMINATIONS COUNCIL

CARIBBEAN SECONDARY EDUCATION CERTIFICATE®
EXAMINATION

05 JANUARY 2021 (a.m.)

J 2 1 0 1 2 3 4 0 2 0

FILL IN ALL THE INFORMATION REQUESTED CLEARLY IN CAPITAL LETTERS.

TEST CODE

0	1	2	3	4	0	2	0

SUBJECT MATHEMATICS – Paper 02

PROFICIENCY GENERAL

REGISTRATION NUMBER

SCHOOL/CENTRE NUMBER

NAME OF SCHOOL/CENTRE

CANDIDATE'S FULL NAME (FIRST, MIDDLE, LAST)

DATE OF BIRTH

D	D	M	M	Y	Y	Y	Y

SIGNATURE _____

0 1 2 3 4 0 2 0 0 1

DO NOT WRITE ON THIS PAGE

0 1 2 3 4 0 2 0 0 2

FORM TP 2021019

TEST CODE **01234020**

JANUARY 2021

CARIBBEAN EXAMINATIONS COUNCIL

CARIBBEAN SECONDARY EDUCATION CERTIFICATE® EXAMINATION

MATHEMATICS

Paper 02 – General Proficiency

2 hours 40 minutes

READ THE FOLLOWING INSTRUCTIONS CAREFULLY.

1. This paper consists of TWO sections: I and II.
2. Section I has SEVEN questions and Section II has THREE questions.
3. Answer ALL questions.
4. Write your answers in the spaces provided in this booklet.
5. Do NOT write in the margins.
6. All working MUST be clearly shown.
7. **A list of formulae is provided on page 4 of this booklet.**
8. If you need to rewrite any answer and there is not enough space to do so on the original page, you must use the extra page(s) provided at the back of this booklet. **Remember to draw a line through your original answer.**
9. **If you use the extra page(s) you MUST write the question number clearly in the box provided at the top of the extra page(s) and, where relevant, include the question part beside the answer.**
10. **ALL diagrams in this booklet are NOT drawn to scale, unless otherwise stated.**

Required Examination Materials

Electronic calculator
Geometry set

DO NOT TURN THIS PAGE UNTIL YOU ARE TOLD TO DO SO.

Copyright © 2019 Caribbean Examinations Council
All rights reserved.

LIST OF FORMULAE

Volume of a prism	$V = Ah$ where A is the area of a cross-section and h is the perpendicular length.
Volume of a cylinder	$V = \pi r^2 h$ where r is the radius of the base and h is the perpendicular height.
Volume of a right pyramid	$V = \frac{1}{3}Ah$ where A is the area of the base and h is the perpendicular height.
Circumference	$C = 2\pi r$ where r is the radius of the circle.
Arc length	$S = \frac{\theta}{360} \times 2\pi r$ where θ is the angle subtended by the arc, measured in degrees.
Area of a circle	$A = \pi r^2$ where r is the radius of the circle.
Area of a sector	$A = \frac{\theta}{360} \times \pi r^2$ where θ is the angle of the sector, measured in degrees.
Area of a trapezium	$A = \frac{1}{2}(a + b)\,h$ where a and b are the lengths of the parallel sides and h is the perpendicular distance between the parallel sides.
Roots of quadratic equations	If $ax^2 + bx + c = 0$, then $x = \frac{-b \pm \sqrt{b^2 - 4ac}}{2a}$
Trigonometric ratios	$\sin\theta = \frac{\text{length of opposite side}}{\text{length of hypotenuse}}$ $\cos\theta = \frac{\text{length of adjacent side}}{\text{length of hypotenuse}}$ $\tan\theta = \frac{\text{length of opposite side}}{\text{length of adjacent side}}$

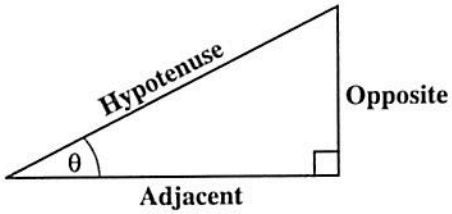

Area of a triangle	Area of $\Delta = \frac{1}{2}bh$ where b is the length of the base and h is the perpendicular height. Area of $\Delta ABC = \frac{1}{2}ab\sin C$ Area of $\Delta ABC = \sqrt{s(s-a)(s-b)(s-c)}$ where $s = \frac{a+b+c}{2}$
Sine rule	$\frac{a}{\sin A} = \frac{b}{\sin B} = \frac{c}{\sin C}$
Cosine rule	$a^2 = b^2 + c^2 - 2bc\cos A$

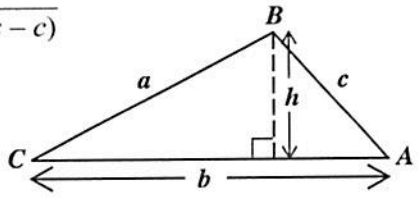

GO ON TO THE NEXT PAGE

SECTION I

Answer ALL questions.

All working must be clearly shown.

1. (a) (i) Using a calculator, or otherwise, calculate the EXACT value of

$$1\frac{4}{7} + \frac{2}{3} - 1\frac{5}{6}.$$

.....

(2 marks)

(ii) Write the value of $\frac{\sqrt[3]{27}}{9^2}$ as a fraction in its LOWEST terms.

.....

(2 marks)

(b) The thickness of one sheet of cardboard is given as 485×10^{-2} mm. A construction worker uses 75 sheets of the cardboard, stacked together, to insulate a wall.

(i) Show that the exact thickness of the insulation is 363.75 mm.

.....

(1 mark)

(ii) Write the thickness of the insulation

a) correct to 2 significant figures

.....

(1 mark)

b) correct to 1 decimal place

.....

(1 mark)

GO ON TO THE NEXT PAGE

c) in standard form.

.....

(1 mark)

(c) Marko is on vacation in the Caribbean. He changes 4500 Mexican pesos (MXN) to Eastern Caribbean dollars (ECD). He receives 630 ECD.

Complete the statement below about the exchange rate.

1 ECD = ... MXN **(1 mark)**

Total 9 marks

2. (a) Factorize the following expression completely.

$$12n^2 - 4mn$$

.....

(1 mark)

(b) (i) Show that $\frac{x}{1-x} - 4x = \frac{x(4x-3)}{1-x}$.

.....

(2 marks)

(ii) Hence, solve the equation

$$\frac{x}{1-x} - 4x = 0.$$

.....

(2 marks)

GO ON TO THE NEXT PAGE

(c) Make v the subject of the formula $p = \sqrt{5 + vt}$.

.....

(2 marks)

(d) The distance needed to stop a car, d, varies directly as the square of the speed, s, at which it is travelling. A car travelling at a speed of 70 km/h requires a distance of 40 m to make a stop. What distance is required to stop a car travelling at 80 km/h?

.....

(2 marks)

Total 9 marks

3. (a) The diagram below shows two pentagons, P and Q, drawn on a grid made up of squares.

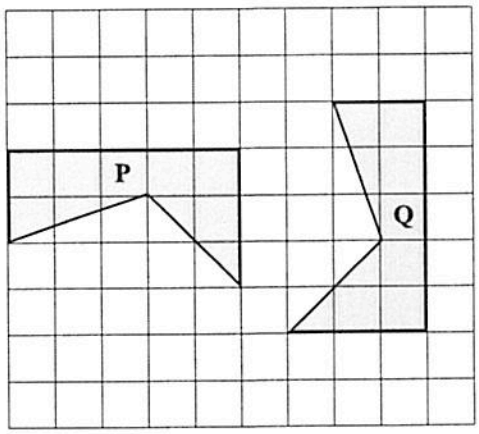

(i) Select the correct word from the following list to complete the statement below.

opposite	reflected	congruent	translated

Pentagon P is ..... to Pentagon Q.

(1 mark)

(ii) Give the reason for your choice in (a) (i).

.....

.....

.....

(1 mark)

GO ON TO THE NEXT PAGE

(b) The diagram below, **not drawn to scale**, shows the pentagon *VWXYZ*. In the pentagon, *YZ* is parallel to *XW* and *YX* is parallel to *VW*. Angle *XYZ* = 114° while angle *VZY* = 98°.

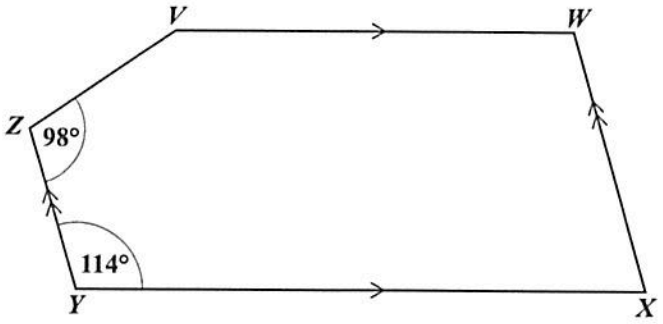

Determine the value of

(i) angle *WXY*

.....

(1 mark)

(ii) angle *ZVW*.

.....

(2 marks)

(c) The letter 'A' and a point C(6, 6) are shown on the grid below.

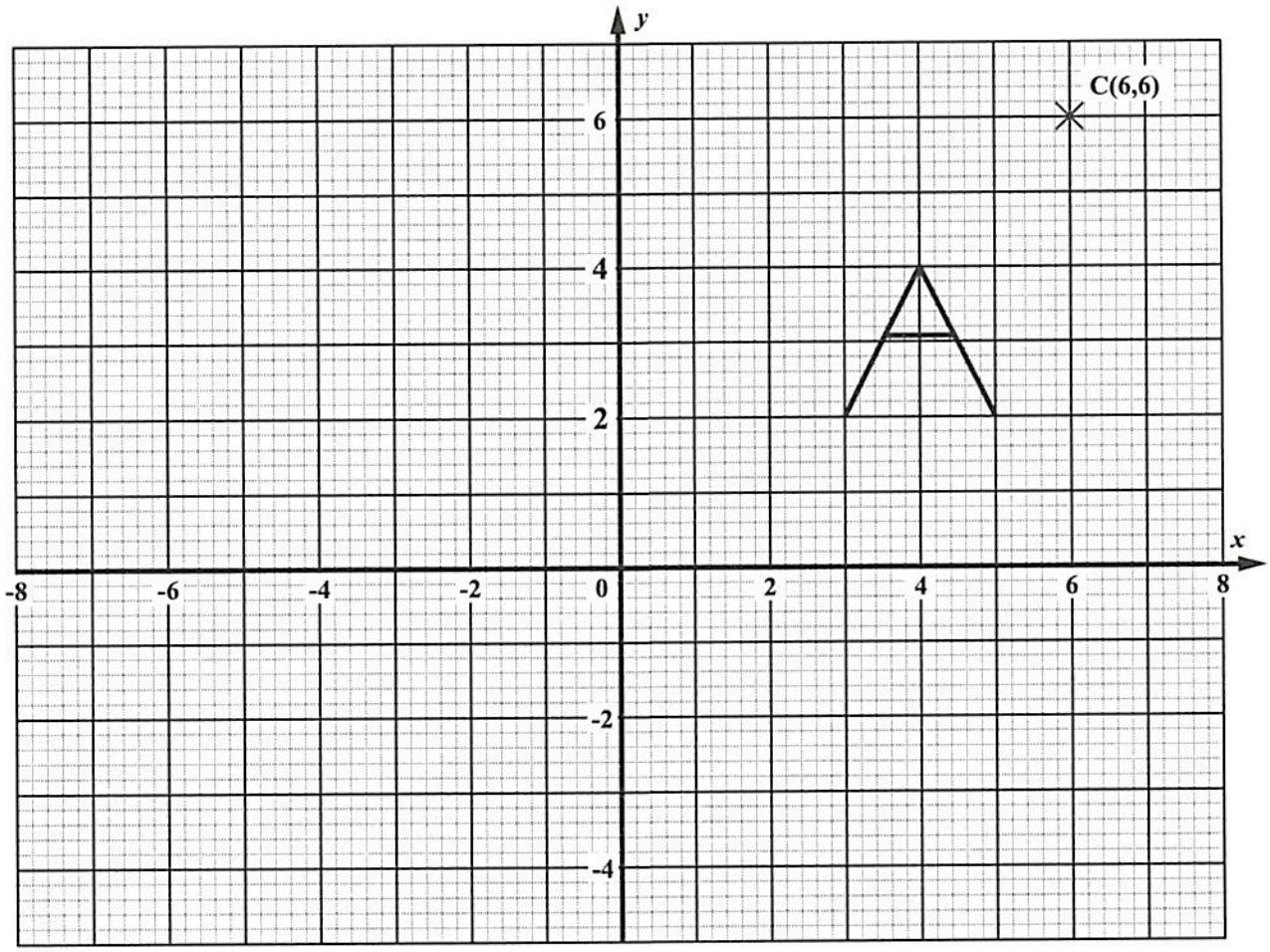

On the diagram, draw accurately, EACH of the following transformations.

(i) The enlargement of letter 'A' by scale factor 2, about centre, C(6, 6). **(2 marks)**

(ii) The translation of letter 'A' using the vector $T = \begin{pmatrix} -3 \\ 2 \end{pmatrix}$. **(2 marks)**

Total 9 marks

GO ON TO THE NEXT PAGE

4. (a) The function f is defined as

$$f : x \rightarrow 3 - 2x.$$

(i) The diagram below shows the mapping diagram of the function, f. Determine the value of a.

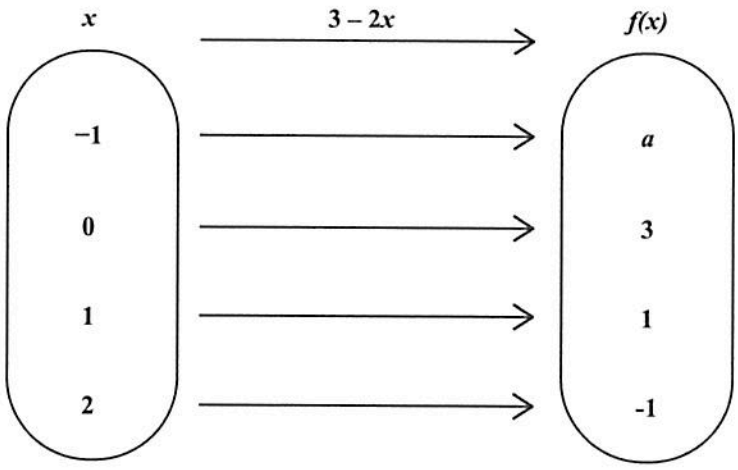

$a =$ .....

.....

(1 mark)

(ii) Determine, in their simplest form, expressions for

a) the inverse of the function f, $f^{-1}(x)$

.....

(1 mark)

b) the **composite** function $f^2(x)$.

.....

(2 marks)

(iii) State the value of $ff^{-1}(-2)$.

.....

(1 mark)

GO ON TO THE NEXT PAGE

(b) (i) Using a ruler, draw the lines $x = \frac{1}{2}$, $y = x$ and $x + y = 5$, on the grid below. **(3 marks)**

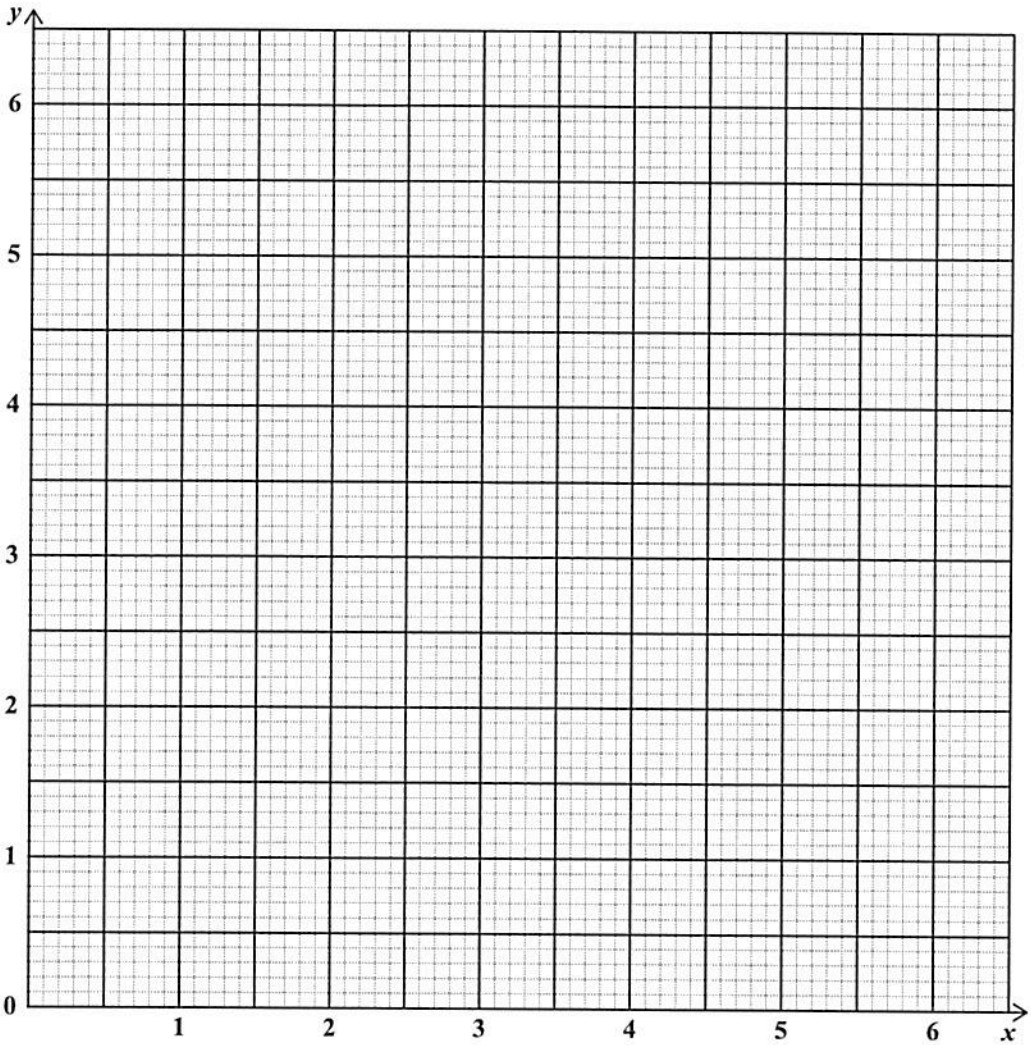

(ii) On the grid, label as R, the region where $x \geq \frac{1}{2}$, $y \geq x$ and $x + y \leq 5$. **(1 mark)**

Total 9 marks

GO ON TO THE NEXT PAGE

5. (a) Sixty students took an algebra test, which comprised 15 multiple choice questions. The number of correct answers that each student obtained is recorded in the table below.

Number of Correct Answers	Number of Students
8	6
9	14
10	2
11	6
12	2
13	11
14	9
15	10

Using the table, determine

(i) the number of students who had exactly 13 correct answers

.....

(1 mark)

(ii) the modal number of correct answers

.....

(1 mark)

(iii) the median number of correct answers

.....

(1 mark)

(iv) the probability that a student chosen at random had at **least** 12 correct answers.

.....

(1 mark)

(b) A group of students wrote a Physics examination. Each of the students achieved a Grade I, II, III or IV. The pie chart below shows the results.

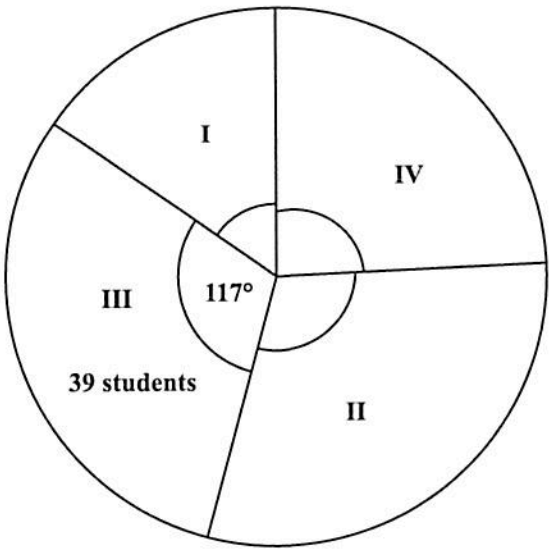

Thirty-nine students achieved a Grade III.

(i) Determine the TOTAL number of students who wrote the examination.

.....

(2 marks)

GO ON TO THE NEXT PAGE

(ii) The ratio of the number of students who achieved a Grade I, II or IV is 2:4:3. A student passed the examination if he/she achieved a Grade I, II or III.

How many students passed the examination?

.....

(2 marks)

(iii) Determine the value of the angle for the sector representing Grade I in the pie chart.

.....

(1 mark)

Total 9 marks

6. In this question, take π to be $\frac{22}{7}$.

The diagram below shows a rectangular tank, with base 50 cm by 40 cm, that is used to store water. The tank is filled with water to a depth of 15 cm.

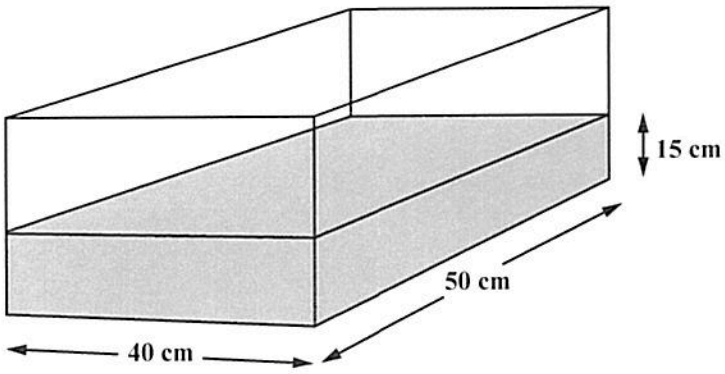

(a) Calculate the volume of water in the tank.

.....

(2 marks)

GO ON TO THE NEXT PAGE

(b) The cylindrical container shown in the diagram below is used to fetch **more** water to fill the rectangular tank. The container, which is completely filled with water, has a radius of 20 cm and a height of 21 cm.

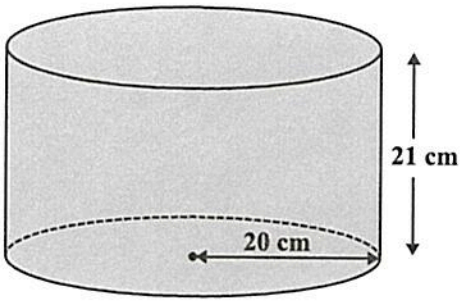

All the water in this container is added to the water in the rectangular tank. Calculate the TOTAL volume of water that is now in the rectangular tank.

.....

(3 marks)

(c) Show that the **new** depth of water in the rectangular tank is 28.2 cm.

.....

(2 marks)

(d) The vertical height of the rectangular tank is 48 cm. Determine how many more cylindrical containers of water must be poured into the rectangular tank for it to be completely filled.

.....

(2 marks)

Total 9 marks

GO ON TO THE NEXT PAGE

7. The diagrams below show a sequence of figures made up of circles with dots. Each figure has one dot at the centre and 4 dots on the circumference of each circle. The radius of the first circle is one unit. The radius of each new circle is one unit greater than the radius of the previous circle. Except for the first figure, a portion of each of the other figures is shaded.

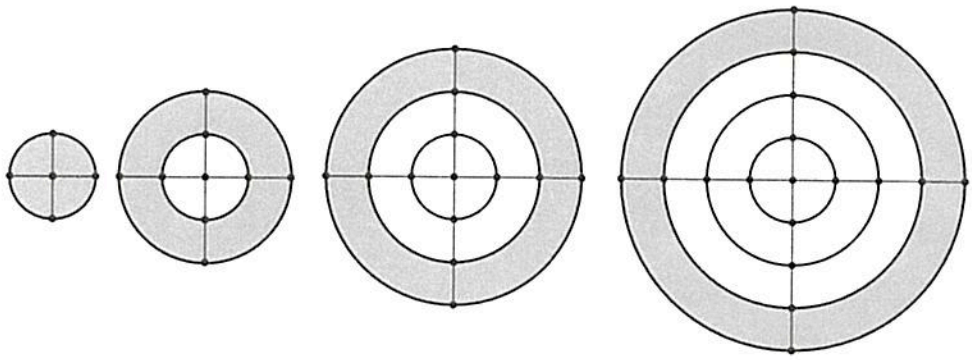

Figure 1 **Figure 2** **Figure 3** **Figure 4**

(a) Complete the rows in the table below for Figure 5 and Figure n.

	Figure Number	Number of Dots	Area of Outer (Largest) Circle	Area of Shaded Region	Total Length of Circumference of all Circles	
	1	5	π	π	2π	
	2	9	4π	3π	6π	
	3	13	9π	5π	12π	
	4	17	16π	7π	20π	
(i)	5	_____	25π	_____	_____	**(3 marks)**
	⋮	⋮	⋮	⋮	⋮	
(ii)	n	_____	_____	_____	_____	**(4 marks)**

GO ON TO THE NEXT PAGE

(b) Determine the value of n, when the number of dots in Figure n is 541.

.....

(2 marks)

(c) Write down, in terms of p and π, the area of the LARGEST circle in Figure $3p$.

.....

(1 mark)

Total 10 marks

SECTION II

Answer ALL questions.

ALGEBRA, RELATIONS, FUNCTIONS AND GRAPHS

8. (a) The straight line graph of $x = 5 - 3y$ intersects the x-axis at P and the y-axis at Q.

(i) Determine the coordinates of P and Q.

P (....., ...) Q (....., ...) **(2 marks)**

(ii) Calculate the length of PQ, giving your answer to 2 decimal places.

.....

(2 marks)

(iii) R is the midpoint of PQ. Determine the coordinates of R.

.....

(1 mark)

(b) The functions f and g are defined as follows

$$f : x \rightarrow 5 - x \text{ and } g : x \rightarrow x^2 - 2x - 1.$$

The graphs of $f(x)$ and $g(x)$ meet at points M and N. Determine the coordinates of the points M and N.

.....

(4 marks)

(c) Monty is cycling at 12 metres per second (m/s). After 4.5 seconds he starts to decelerate and after a further 2.5 seconds he stops. The speed–time graph is shown below.

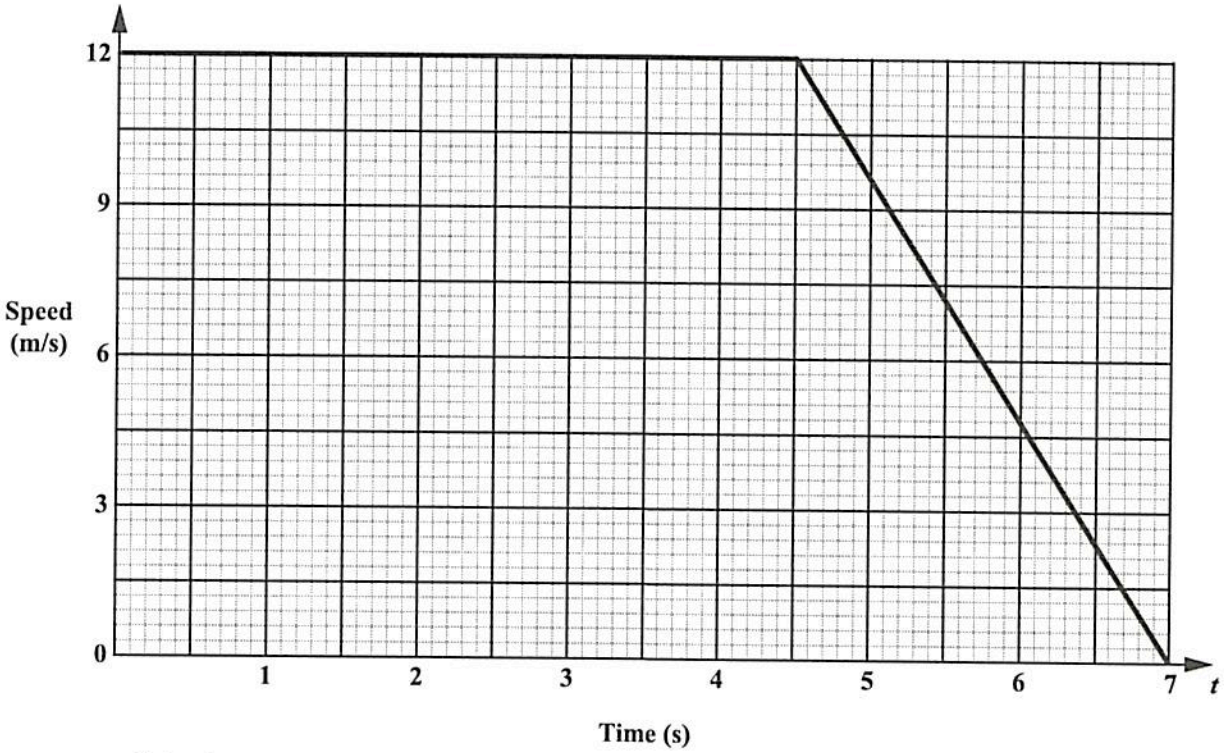

Calculate

(i) the constant deceleration

.....

(1 mark)

(ii) Monty's average speed over the 7 seconds.

.....

(2 marks)

Total 12 marks

GO ON TO THE NEXT PAGE

GEOMETRY AND TRIGONOMETRY

9. (a) In the diagram below, A, B, C and D are points on the circumference of a circle, with centre O. AOC and BOD are diameters of the circle. AB and DC are parallel.

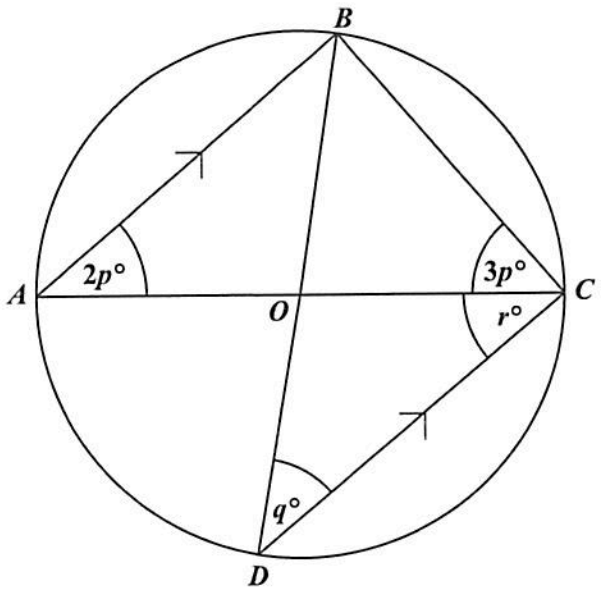

(i) State the reason why angle ABC is 90°.

.....

.....

.....

.....

(1 mark)

GO ON TO THE NEXT PAGE

(ii) Determine the value of EACH of the following angles. Show detailed working where necessary and give a reason to support your answer.

a) Angle *BAC*

Reason

.....

.....

.....

.....

(2 marks)

b) Angle *q*

Reason

.....

.....

.....

.....

(2 marks)

GO ON TO THE NEXT PAGE

(iii) Calculate the value of angle r.

(1 mark)

(b) From a harbour, H, the bearing of two buoys, S and Q, are 185° and 311° respectively. Q is 5.4 km from H while S is 3.5 km from H.

(i) On the diagram below, which shows the sketch of this information, insert the value of the marked angle, QHS. **(1 mark)**

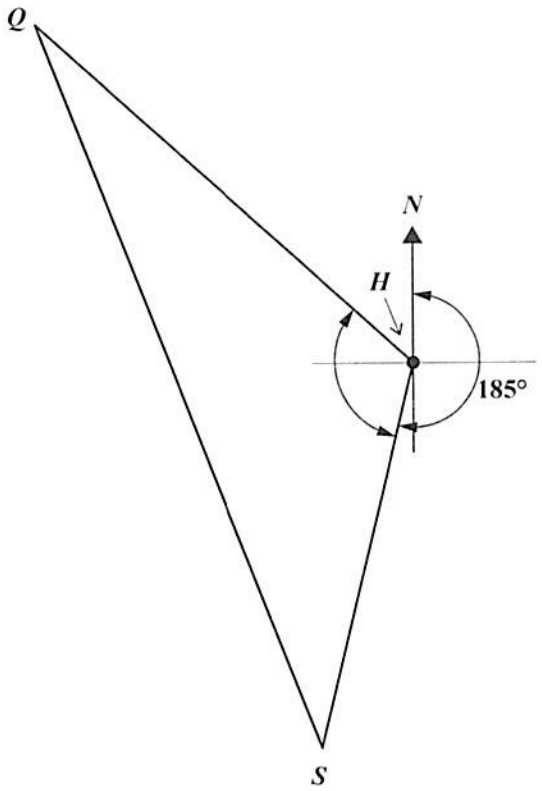

(ii) Calculate QS, the distance between the two buoys.

.....

(2 marks)

(iii) Calculate the bearing of S from Q.

.....

(3 marks)

Total 12 marks

VECTORS AND MATRICES

10. (a) Given the matrix $W = \begin{pmatrix} 3 & 6 \\ -2 & 5 \end{pmatrix}$, determine

(i) the 2×2 matrix, L, such that $W + L = \begin{pmatrix} 0 & 0 \\ 0 & 0 \end{pmatrix}$

.....

(1 mark)

(ii) the 2×2 matrix, P, such that $WP = \begin{pmatrix} 1 & 0 \\ 0 & 1 \end{pmatrix}$.

.....

(2 marks)

(b) A right-angled triangle, M, has vertices $X(1, 1)$, $Y(3, 1)$ and $Z(3, 4)$. When M is transformed by the matrix $N = \begin{pmatrix} 0 & 1 \\ 1 & 0 \end{pmatrix}$, the image is M'.

Find the coordinates of the vertices of M'.

.....

(2 marks)

GO ON TO THE NEXT PAGE

(c) The diagram below shows triangle OPQ in which $\overrightarrow{OP} = 3u$ and $\overrightarrow{OQ} = v$. Q is the midpoint of OR and M is the midpoint of PQ. L is a point on OP such that $OL = \frac{2}{3}OP$.

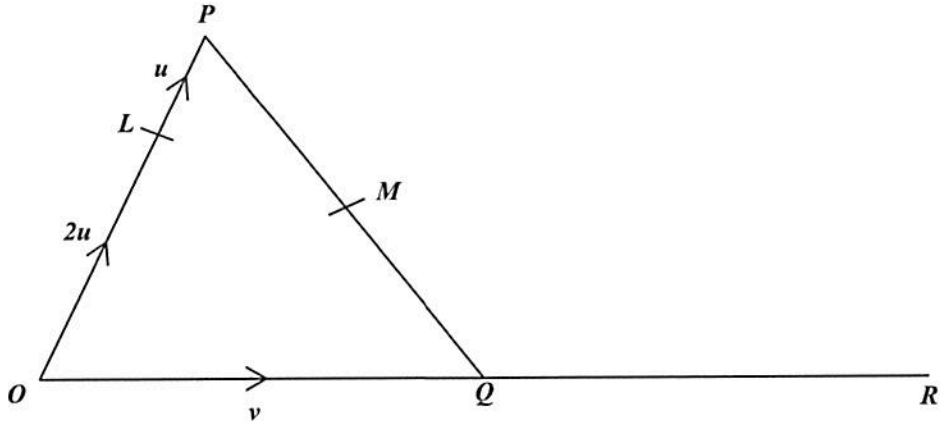

(i) Write in terms of u and v, an expression for

a) $\overrightarrow{LM}$

.....

(2 marks)

GO ON TO THE NEXT PAGE

b) $\overrightarrow{PR}$.

.....

(1 mark)

(ii) Prove that the points L, M and R are collinear.

.....

(4 marks)

Total 12 marks

END OF TEST

IF YOU FINISH BEFORE TIME IS CALLED, CHECK YOUR WORK ON THIS TEST.

EXTRA SPACE

If you use this extra page, you MUST write the question number clearly in the box provided.

Question No.

EXTRA SPACE

If you use this extra page, you MUST write the question number clearly in the box provided.

Question No.

EXTRA SPACE

If you use this extra page, you MUST write the question number clearly in the box provided.

Question No.

DO NOT WRITE ON THIS PAGE

0 1 2 3 4 0 2 0 3 9

CANDIDATE'S RECEIPT

INSTRUCTIONS TO CANDIDATE:

1. **Fill in all the information requested clearly in capital letters.**

TEST CODE: | 0 | 1 | 2 | 3 | 4 | 0 | 2 | 0 |

SUBJECT: MATHEMATICS – Paper 02

PROFICIENCY: GENERAL

REGISTRATION NUMBER: | | | | | | | | | | |

FULL NAME: _____
(BLOCK LETTERS)

Signature: _____

Date: _____

2. **Ensure that this slip is detached by the Supervisor or Invigilator and given to you when you hand in this booklet.**

3. **Keep it in a safe place until you have received your results.**

INSTRUCTION TO SUPERVISOR/INVIGILATOR:

Sign the declaration below, detach this slip and hand it to the candidate as his/her receipt for this booklet collected by you.

I hereby acknowledge receipt of the candidate's booklet for the examination stated above.

Signature: _____
Supervisor/Invigilator

Date: _____

0 1 2 3 4 0 2 0 4 0