TEST CODE **000592**

# FORM TP 22119

MAY/JUNE 2002

CARIBBEAN EXAMINATIONS COUNCIL

## SECONDARY EDUCATION CERTIFICATE EXAMINATION

## MATHEMATICS

**Paper 02 - General Proficiency**

***2 hours 40 minutes***

**30 MAY 2002 (a.m.)**

### INSTRUCTIONS TO CANDIDATES

1. **Answer ALL questions in Section I, and any TWO in Section II.**
2. **Begin the answer for each question on a new page.**
3. **Full marks may not be awarded unless full working or explanation is shown with the answer.**
4. **Mathematical tables, formulae and graph paper are provided.**
5. **Mathematical instruments and silent electronic calculators may be used for this paper.**
6. **You are advised to use the first 10 minutes of the examination time to read through this paper. Writing may begin during this 10-minute period.**

**DO NOT TURN THIS PAGE UNTIL YOU ARE TOLD TO DO SO**

Copyright © 2001 Caribbean Examinations Council.
All rights reserved.

## SECTION I

**Answer ALL the questions in this section.**

**ALL working must be clearly shown.**

**1.** (a) Calculate the exact value of

$$\frac{3\frac{1}{4} - 2\frac{1}{3}}{1\frac{5}{6}}.$$

**( 3 marks)**

(b) Write the value of

$$(11.2)^2 - (0.375 \div 3)$$

(i) exactly

(ii) to two significant figures

(iii) in standard form. **( 5 marks)**

(c) A metal is made from copper, zinc and lead in the ratio 13 : 6 : 1. The mass of the zinc is 90 kg. Calculate the mass of the metal. **( 4 marks)**

**Total 12 marks**

**2.** (a) Simplify

(i) $3m - 2(m + 1)$

(ii) $\frac{3}{y} - \frac{2}{y - 2}$. **( 5 marks)**

(b) Solve the equation

$$2(x - 1) = \frac{5}{2}.$$ **( 3 marks)**

(c) Calculate the range of values of $v$ when $5 - v \leq 2v - 1$. **( 3 marks)**

**Total 11 marks**

GO ON TO THE NEXT PAGE

**3.** (a)

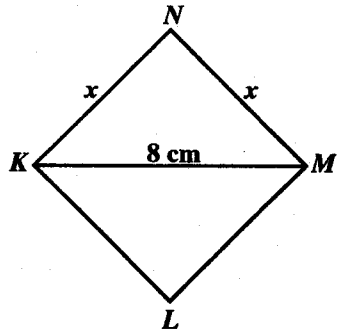


The diagram above, **not drawn to scale**, shows a square $KLMN$, where $KM = 8$ cm and $KN = MN = x$ cm.

Show that $x^2 = 32$. **( 2 marks)**

(b) (i) **Using ruler and compasses only**

a) draw the diagonal $KM = 8$ cm

b) construct the perpendicular bisector of $KM$.

(ii) Hence, draw the square $KLMN$. **( 5 marks)**

(c)

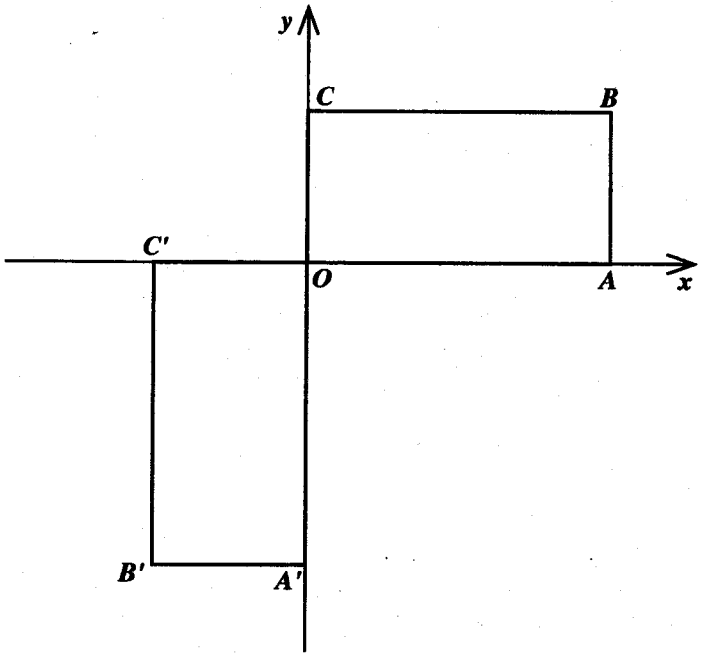


In the diagram above, $OC = OC'$, $BC = B'C'$ and all angles are right angles. $OABC$ can be mapped onto $OA'B'C'$ by a transformation, $J$, followed by another transformation, $K$.

Describe fully the transformations

(i) $J$

(ii) $K$. **( 3 marks)**

**Total 10 marks**

GO ON TO THE NEXT PAGE

**4.** (a)

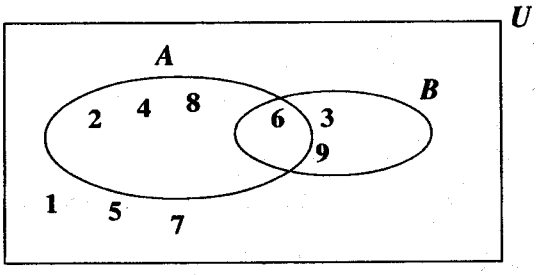


In the Venn diagram above,

$U$ = {whole numbers less than 10}, and
$A$ and $B$ are subsets of $U$.

(i) Describe $A$ and $B$ in words.

(ii) List the members of $A \cap B$ and describe the set, in words, in relation to $A$ and $B$.

(iii) Determine $n(A \cup B)'$. **( 5 marks)**

(b)

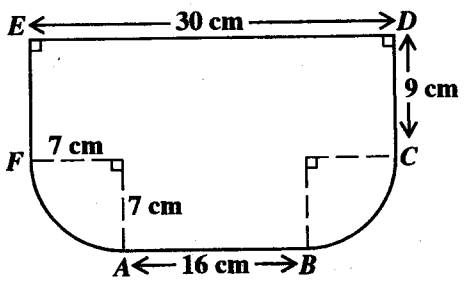


The diagram above, **not drawn to scale**, shows $ABCDEF$, a vertical cross-section of a container with $ED$ being the top edge. $DC$ and $EF$ are vertical edges. $BC$ and $AF$ are arcs of a circle of radius 7 cm and $AB \parallel ED$.

$ED$ = 30 cm; $AB$ = 16 cm; $EF$ = $DC$ = 9 cm.

(i) Taking $\pi = \frac{22}{7}$, show that the area of $ABCDEF$ is 459 cm$^2$.

(ii) Water is poured into the container until the water level is 4 cm from the top. If the container is 40 cm long and has uniform cross-section, calculate, to the nearest litre, the volume of water in the container. **( 7 marks)**

**Total 12 marks**

GO ON TO THE NEXT PAGE

**5.** (a) Given that $\overrightarrow{PR} = \begin{pmatrix} b \\ -2b \end{pmatrix}$

and $\overrightarrow{PS} = \begin{pmatrix} 3b \\ b+1 \end{pmatrix}$,

(i) express EACH of the vectors $\overrightarrow{RP}$ and $\overrightarrow{RS}$ in the simplest form

(ii) determine the values of $b$ if $|\overrightarrow{PR}| = \sqrt{20}$ units. **( 6 marks)**

(b) A man travelled a total distance of 8 km in 54 minutes by running and walking. He ran $x$ km at 10 km $h^{-1}$ and walked the remaining distance at 5 km $h^{-1}$.

(i) Write an expression in $x$ for the time, in hours, that

a) he ran

b) he walked. **( 3 marks)**

(ii) a) Form an equation in $x$ for the total time, in hours, spent travelling.

b) Calculate the value of $x$.

c) Hence, calculate the distance the man walked. **( 3 marks)**

**Total 12 marks**

**6.** The functions, $f$ and $g$, are defined by

$f(x) = \frac{x}{3} + 1$ and

$g(x) = 2x - 1$.

(a) Calculate $g(-3)$. **( 1 mark )**

(b) Find, in its simplest form,

(i) $f^{-1}(x)$

(ii) $g^{-1}(x)$

(iii) $fg(x)$

(iv) $(fg)^{-1}(x)$. **( 7 marks)**

(c) Show that $(fg)^{-1}(x) = g^{-1}f^{-1}(x)$. **( 3 marks)**

**Total 11 marks**

GO ON TO THE NEXT PAGE

**7.** (a)

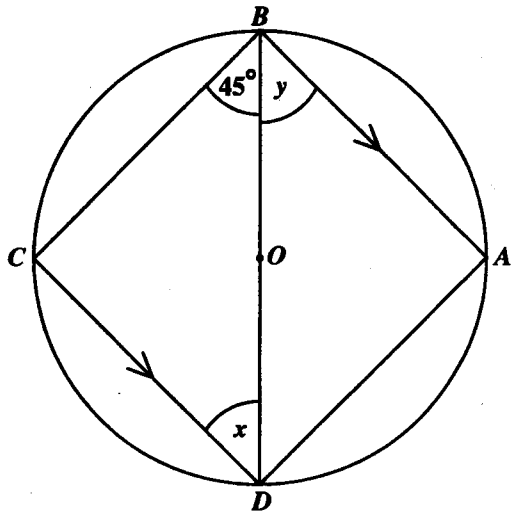


The diagram above, **not drawn to scale**, shows a circle, centre $O$. $BA$ is parallel to $CD$ and $C\hat{B}D = 45°$.

(i) Calculate, giving reasons, the values of $x$ and $y$.

(ii) Show that $ABCD$ is a square, giving the reasons for your answer.

**( 6 marks)**

(b) Points $O$, $P$ and $Q$ are in the same horizontal plane. $P$ is 15 m away from $O$ on a bearing of 040° from $O$. $Q$ is on a bearing of 130° from $O$, and $PQ = 17$ m.

(i) Sketch a diagram to show the positions of $O$, $P$ and $Q$. Clearly indicate North on your diagram.

(ii) Calculate the distance $OQ$. **( 6 marks)**

**Total 12 marks**

GO ON TO THE NEXT PAGE

**8.** A student estimated that he had 30 hours available each week for home study and for sports. The table below shows the percentage of time he spent on each activity.

| **Activities** | **%** |
|---|---|
| Languages | 30 |
| Mathematics | 20 |
| Computer Studies | 15 |
| Sciences | 15 |
| Sports | $x$ |

(a) Calculate the number of hours spent on sports. **( 2 marks)**

(b) Calculate the angles in a pie chart that would be used to represent the hours spent on

(i) Mathematics

(ii) Languages. **( 2 marks)**

(c) Draw a pie chart to represent the distribution of hours in the week, which the student spends on the activities indicated in the table above. **( 3 marks)**

(d) One hour in the 30 hours is chosen at random. Calculate the probability that the student is

(i) playing sports

(ii) studying Mathematics or Languages. **( 3 marks)**

**Total 10 marks**

## SECTION II

**Answer TWO questions in this section.**

### RELATIONS, FUNCTIONS AND GRAPHS

**9.** (a) Given that $y = \frac{1}{2}x^3$, copy and complete the table below.

| $x$ | $-2$ | $-1$ | 0 | 1 | 2 | 3 |
|---|---|---|---|---|---|---|
| $y$ | | $-0.5$ | 0 | | 4 | 13.5 |

**( 2 marks)**

(b) **Using scales of 2 cm to represent 1 unit on the $x$-axis, and 1 cm to represent 1 unit on the $y$-axis**, draw the graph of the function $y$ for

$-2 \leq x \leq 3$. **( 7 marks)**

GO ON TO THE NEXT PAGE

(c) Using the graph

(i) solve the equation, $\frac{1}{2}x^3 = 4$

(ii) determine the values of $x$ for which $\frac{1}{2}x^3 \leq 4$. **( 4 marks)**

(d) Using the same axes and scales

(i) draw the graph of $y = 2$

(ii) write down the equation in $x$ whose root is given by the intersection of the graphs, $y = 2$ and $y = \frac{1}{2}x^3$. **( 2 marks)**

**Total 15 marks**

**10.** (a)

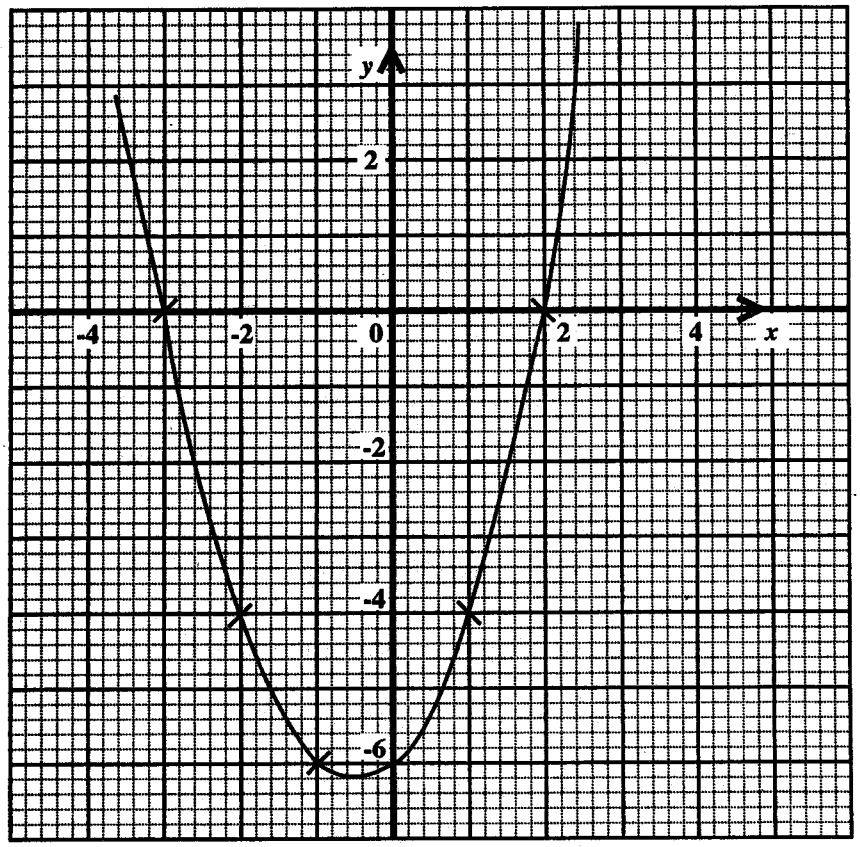


The diagram above shows the graph of the function $y = px^2 + qx + r$.

(i) Determine the values of $p$, $q$, and $r$.

(ii) State TWO ways in which the graphs of the functions $y = px^2$ and $y = px^2 + qx + r$ are similar.

(iii) State ONE way in which the graphs of the two functions is different.

**( 8 marks)**

GO ON TO THE NEXT PAGE

(b)

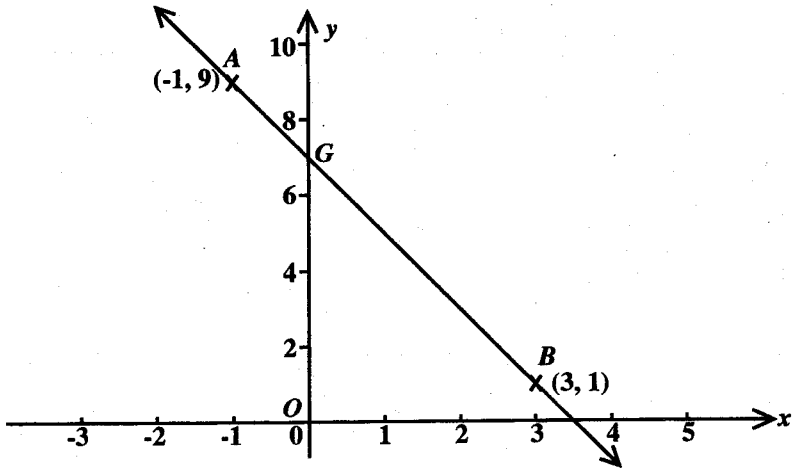


In the diagram above, **not drawn to scale**, $AB$ is the straight line joining $A(-1, 9)$ and $B(3, 1)$.

(i) Calculate the gradient of the line, $AB$.

(ii) Determine the equation of the line, $AB$.

(iii) Write the coordinates of $G$, the point of intersection of $AB$ and the $y$-axis.

(iv) Write the equation of the line through $O$, the origin, that is perpendicular to $AB$.

(v) Write the equation of the line through $O$ that is parallel to $AB$.

**( 7 marks)**

**Total 15 marks**

## GEOMETRY AND TRIGONOMETRY

**11.** (a) In $\Delta\, JKL$, the coordinates of the vertices are $J(0, 1)$, $K(5, -4)$ and $L(7, 2)$.

(i) Draw $\Delta\, JKL$.

(ii) Determine the coordinates of $M$, the midpoint of $KL$.

(iii) Show by calculation, that $JK = JL$. **( 7 marks)**

GO ON TO THE NEXT PAGE

(b)

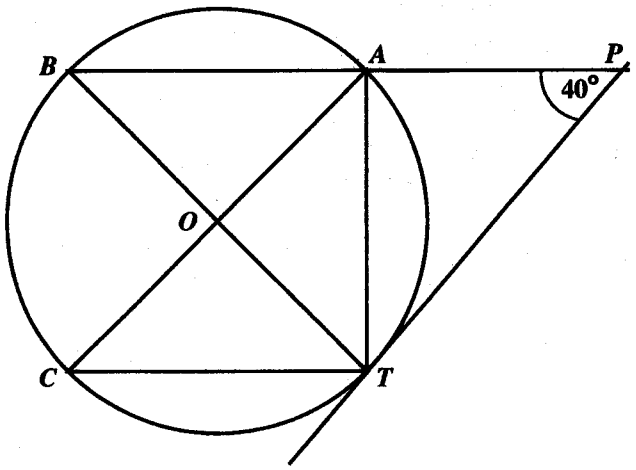


In the diagram above, **not drawn to scale**, $ABCT$ is a circle. $AC$ and $BT$ are diameters. $TP$, the tangent at $T$, meets $BA$ produced at $P$, so that $\angle APT = 40°$.

Calculate, **giving reasons for all statements**, the size of

(i) $\angle BTP$

(ii) $\angle BAT$

(iii) $\angle ABT$

(iv) $\angle ACT$. **( 8 marks)**

**Total 15 marks**

**12.** (a)

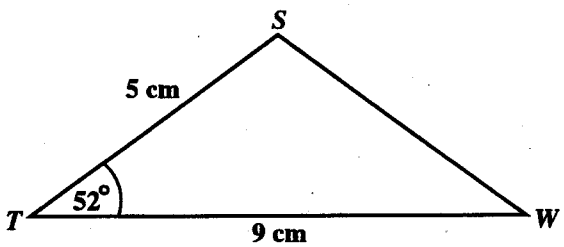


In the diagram above, **not drawn to scale**, $ST = 5$ cm, $TW = 9$ cm and $STW = 52°$.

Calculate

(i) the length of $SW$

(ii) the area of $\Delta\ STW$. **( 7 marks)**

GO ON TO THE NEXT PAGE

(b)

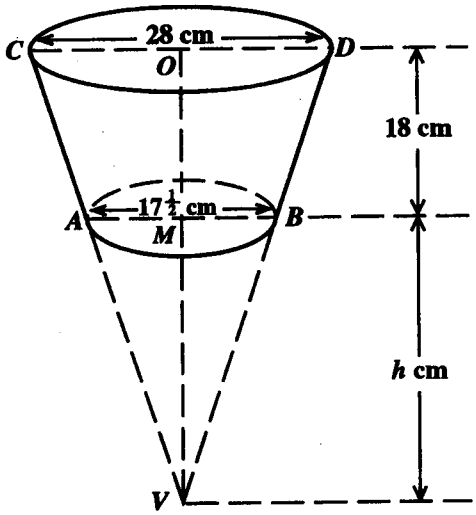


The diagram above, **not drawn to scale**, shows *ABCD*, a bucket of height 18 cm. The bucket is made by removing a cone *VAB*. of height *h* cm, from a larger cone *VCD*.

*AMB*, the diameter of the circular base of the bucket is $17\frac{1}{2}$ cm. *COD*, the diameter of the open top, is 28 cm.

(i) Show, giving reasons, that $\frac{h}{18+h} = \frac{5}{8}$.

(ii) Determine the value of *h*. **( 8 marks)**

**Total 15 marks**

## VECTORS AND MATRICES

**13.** (a) Given that $M = \begin{pmatrix} n+1 & 2 \\ 2n & n \end{pmatrix}$

(i) write down an expression for the determinant of *M*

(ii) find $M^{-1}$.

**( 4 marks)**

(b) The coordinates of the vertices of $\Delta\, PQS$ are $P(1, 5)$, $Q\,(4, -1)$ and $S(6, 0)$.

(i) Write down the position vectors, $\overrightarrow{PQ}$ and $\overrightarrow{PS}$.

(ii) Determine the position vectors, $\overrightarrow{OG}$ and $\overrightarrow{OH}$, given that *G* and *H* are the midpoints of *PQ* and *PS* respectively.

(iii) Determine the vectors $\overrightarrow{GH}$ and $\overrightarrow{QS}$.

(iv) Hence, state TWO geometrical relationships between *GH* and *QS*. **(11 marks)**

**Total 15 marks**

GO ON TO THE NEXT PAGE

**14. An answer sheet is provided for Parts (d) and (e).**

(a) Write down the matrix

(i) $M_y$ that represents reflection in the $y$-axis

(ii) $R_l$ that represents a rotation of 180° about the origin.

**( 2 marks)**

(b) Determine the single matrix, $U$, that represents a transformation, $M_y$, followed by another transformation, $R_l$. **( 2 marks)**

(c) Describe geometrically the transformation represented by

(i) $R_p = \begin{pmatrix} 0 & -1 \\ 1 & 0 \end{pmatrix}$

(ii) $E = \begin{pmatrix} 2 & 0 \\ 0 & 2 \end{pmatrix}$. **( 4 marks)**

(d) On the **answer sheet provided**, using a scale of 1 cm to represent 1 unit on each axis, draw the pentagon $ABCDE$ with vertices $A$ (1, 2), $B$ (4, 2), $C$(4, 5), $D$(2, 6) and $E$(1, 5).

**( 1 mark )**

(e) Draw the image of $ABCDE$ under the transformation represented by

(i) $R_p$, and label that image $A'B'C'D'E'$

(ii) $E$, and label that image $A''B''C''D''E''$. **( 6 marks)**

**Total 15 marks**

**END OF TEST**



8322119

TEST CODE **000592**

# FORM TP 22119

MAY/JUNE 2002

**CARIBBEAN EXAMINATIONS COUNCIL**

**SECONDARY EDUCATION CERTIFICATE EXAMINATION**

**MATHEMATICS**

**Paper 02 - General Proficiency**

**Answer sheet for Question 14 (d) & (e).** **Candidate number .....**

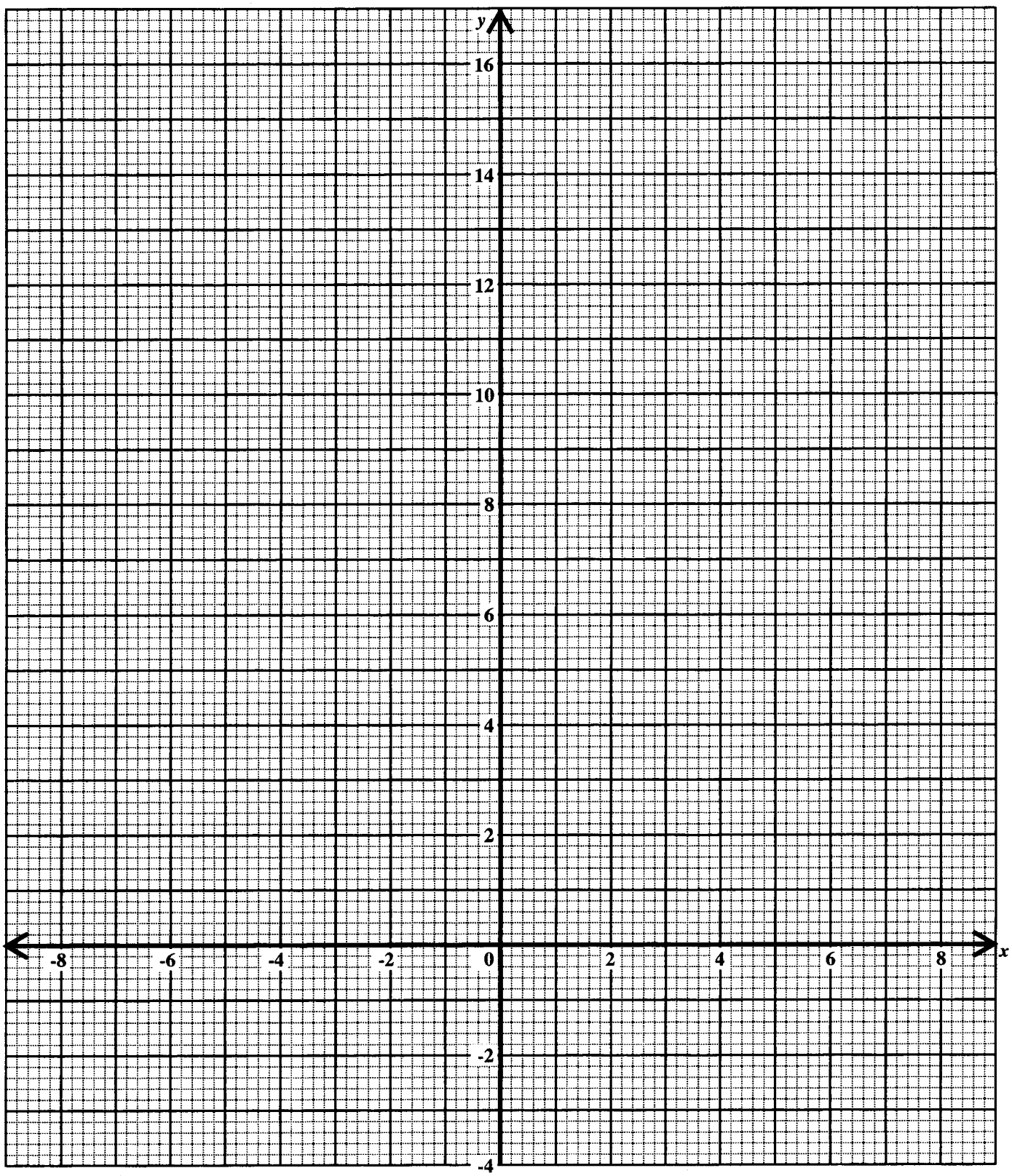


**ATTACH THIS ANSWER SHEET TO YOUR ANSWER BOOKLET**