TEST CODE **002492**

FORM TP 2323

JANUARY 2003

CARIBBEAN EXAMINATIONS COUNCIL

SECONDARY EDUCATION CERTIFICATE EXAMINATION

PHYSICS

Paper 02 – General Proficiency

$1\frac{1}{2}$ hours

READ THE FOLLOWING DIRECTIONS CAREFULLY

1. You MUST use this answer booklet when responding to the questions. For each question, write your answer in the space provided and return the answer booklet at the end of the examination.
2. ALL WORKING MUST BE SHOWN in this booklet, since marks will be awarded for correct steps in calculations.
3. Attempt ALL questions.
4. The use of non-programmable calculators is allowed.
5. Mathematical tables are provided.

DO NOT TURN THIS PAGE UNTIL YOU ARE TOLD TO DO SO

Copyright © 2002 Caribbean Examinations Council.
All rights reserved.

1.

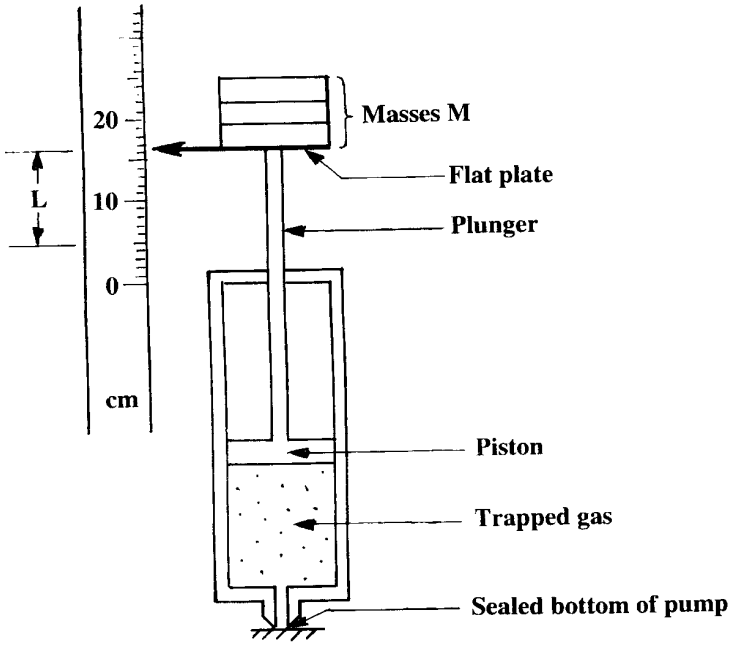

Figure 1

A bicycle pump is modified by replacing the handle with a flat plate onto which masses can be placed. The plate carries an attached pointer that is next to a vertical scale as shown in Figure 1. The bottom of the pump is sealed so that a fixed mass of gas is trapped inside. Initially masses, M, are added to the flat plate until the pointer reaches the 5 cm mark. The masses are then removed in steps, the trapped gas expands and drives up the piston, increasing the upward displacement L. Corresponding values of L and M are recorded in the table below.

(Assume the temperature of the gas is kept constant throughout the experiment.)

TABLE 1

Mass M(kg)	118	48.0	25.0	13.0	6.00	2.00
Displacement L(cm)	5.00	10.0	15.0	20.0	25.0	30.0
$\frac{1}{L}$ **(cm^{-1})**						

(a) (i) Calculate corresponding values of $\frac{1}{L}$ and complete Table 1. **(4 marks)**

(ii) Plot M vs $\frac{1}{L}$ on the graph paper on the opposite page. **(9 marks)**

GO ON TO THE NEXT PAGE

GO ON TO THE NEXT PAGE

(iii) Determine the slope, S, of the graph and give its unit.

_____

_____

_____

_____

(4 marks)

(b) (i) What is the value of L when M = 0?

_____

_____

(2 marks)

(ii) The results of this experiment can be used to verify Boyle's Law. State Boyle's Law as clearly and as completely as you can.

_____

_____

_____

(3 marks)

(iii) State TWO precautions that Boyle's Law suggests for this experiment?

_____

_____

_____

_____

(2 marks)

(c) (i) The piston has a radius of 2.5 cm. Calculate its area in m^2.

(3 marks)

(ii) Calculate the pressure applied to the trapped mass of gas when a mass of 100 kg rests on the flat plate.

(3 marks)

Total 30 marks

2. (a) Explain what is meant by the term 'electric current' and give the SI unit for an electric current.

_____

_____

_____

(3 marks)

(b) Figure 2 shows the internal layout of a torchlight (flashlight) and its electrical circuit.

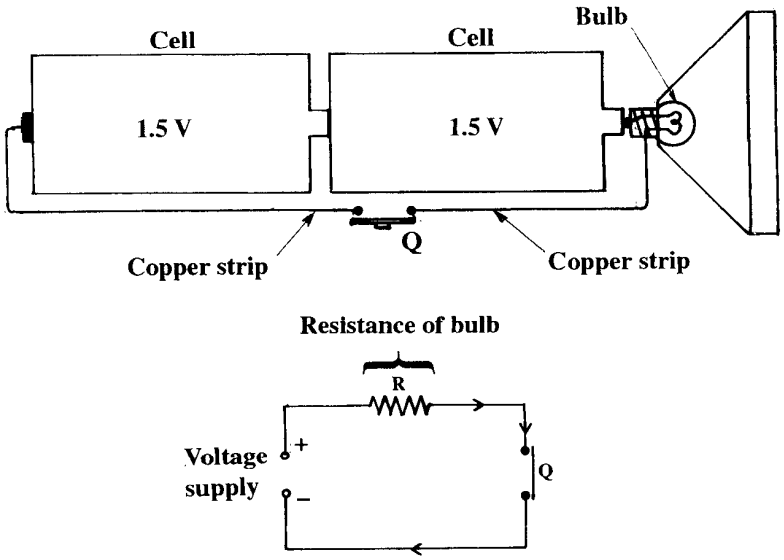

Figure 2

(i) In the space below draw the circuit symbol used to represent one of these cells.

(1 mark)

(ii) State the type of energy conversion which takes place in these cells.

_____

_____

_____

(1 mark)

GO ON TO THE NEXT PAGE

(iii) The component labelled Q is used to connect the copper strips thereby completing a closed circuit. Name this component.

_____

_____

(1 mark)

(c) The voltage of each cell is 1.5 V and the bulb has a resistance of 6 Ω .

(i) Calculate the current flowing in the circuit.

_____

_____

_____

(3 marks)

(ii) How much energy is delivered to the bulb in 12 minutes?

_____

_____

_____

_____

_____

_____

_____

(6 marks)

Total 15 marks

3. (a) Describe the nature and origin of the following particles:

(i) α – particle:

_____

_____

(3 marks)

(ii) β – particle:

_____

_____

(3 marks)

GO ON TO THE NEXT PAGE

(b) β – particles move at much greater speeds than α – particles but cause much less ionization when passing through air. Give TWO reasons why this is so.

(2 marks)

(c) Radon is a naturally occurring gas which has a half life of 54 seconds.

(i) What fraction of a sample of this gas is left after 108 seconds.

(2 marks)

(ii) Calculate the time that will elapse before only $\frac{1}{64}$ of the original sample remains.

(3 marks)

(d) (i) A nucleus of the radioactive isotope $^{222}_{86}Rn$ emits an α – particle when it decays into a nucleus of the element Po. Complete the equation representing this event by writing in the nucleon and proton numbers.

$$^{222}_{86}Rn \rightarrow Po + He$$

(2 marks)

Total 15 marks

GO ON TO THE NEXT PAGE

4. (a) (i) State what is meant by the term 'change of phase.'

_____

_____

_____

(1 mark)

(ii) List TWO features that are characteristic of a phase change.

_____

_____

_____

(2 marks)

(iii) Ice initially at $-5^{\circ}C$ is heated until steam is formed. Sketch a graph showing how the temperature of the ice would vary with time.

(4 marks)

(b) (i) 200 g of crushed ice at $-5^{\circ}C$ is heated until it JUST reaches $0^{\circ}C$. Calculate the heat required for this process.

(4 marks)

(ii) More heat is added at $0^{\circ}C$ until it is completely converted to water. Calculate the amount of heat that is added during the heating process.

(Specific Heat Capacity of Ice = 2100 J kg K^{-1})
(Specific Latent Heat of Ice = 3.34×10^{5} J kg^{-1}) **(3 marks)**

Total 14 marks

5.

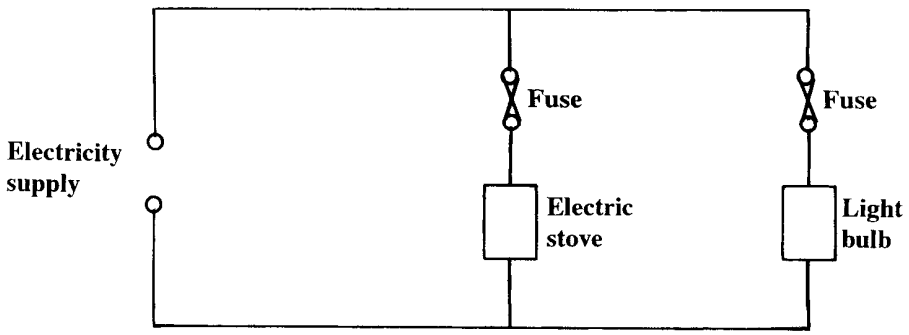

Figure 3.

(a) Figure 3 shows two household appliances connected in parallel to the electricity supply.

(i) Give TWO advantages of connecting electrical appliances in parallel.

_____

_____

_____

_____

_____

(2 marks)

(ii) Explain the purpose of the fuses.

_____

_____

_____

_____

(2 marks)

(iii) In connecting the stove, an earth wire is also used. State its function.

_____

_____

_____

(1 mark)

(b) Suppose the supply voltage were 220 V d.c. and the electric stove and light bulb are rated at 1500 W and 150 W respectively.

(i) Select ONE fuse of correct rating for the electric stove from the list below and explain your choice.

1.0 A, 2A, 10 A, 15 A

(5 marks)

(ii) Calculate the TOTAL current drawn from the supply if BOTH appliances are being operated.

(4 marks)

(iii) Explain TWO reasons why alternating current is MORE suitable than direct current for country-wide distribution of electricity.

(2 marks)

Total 16 marks

END OF TEST