FORM TP 2015022

TEST CODE **01238020**

JANUARY 2015

CARIBBEAN EXAMINATIONS COUNCIL

CARIBBEAN SECONDARY EDUCATION CERTIFICATE®
EXAMINATION

PHYSICS

Paper 02 – General Proficiency

2 hours 30 minutes

READ THE FOLLOWING INSTRUCTIONS CAREFULLY.

1. This paper consists of two sections: A and B.
2. Section A consists of THREE questions. Candidates must attempt ALL questions in this section.
3. Section B consists of THREE questions. Candidates must attempt ALL questions in this section.
4. All answers MUST be written in this answer booklet.
5. Do NOT write in the margins.
6. All working MUST be clearly shown.
7. You may use a silent, non-programmable calculator, but you should note that the use of an inappropriate number of figures in answers will be penalized.
8. Mathematical tables are provided.
9. If you need to rewrite any answer and there is not enough space to do so on the original page, you must use the extra lined page(s) provided at the back of this booklet. **Remember to draw a line through your original answer.**
10. **If you use the extra page(s) you MUST write the question number clearly in the box provided at the top of the extra page(s) and, where relevant, include the question part beside the answer.**

DO NOT TURN THIS PAGE UNTIL YOU ARE TOLD TO DO SO.

Copyright © 2013 Caribbean Examinations Council
All rights reserved.

SECTION A

Answer ALL questions.

You MUST write your answers in this answer booklet.

1. A Form 4 Physics student was investigating how the square of the period, T^2, of a simple pendulum varied with its length, l. Her objective was to determine the acceleration due to gravity. Table 1 shows her results.

TABLE 1

Length of Pendulum, *l(m)*	**Time for 20 Oscillations, *t(s)***	**Time for 1 Oscillation (period), *T(s)***	**Period Squared $T^2(s^2)$**
0.20	18.00		
0.30	21.91		
0.40	25.40		
0.50	28.28		
0.60	31.10		
0.70	33.80		

(a) Complete Table 1 to determine values for plotting a graph. **(6 marks)**

(b) On the graph paper provided on page 3, plot a graph of Period Squared (T^2) on the vertical axis versus length (l) on the horizontal axis. Start each axis at zero. **(7 marks)**

(c) Calculate the gradient of this graph.

.....

.....

.....

.....

.....

.....

(4 marks)

GO ON TO THE NEXT PAGE

DO NOT WRITE IN THIS AREA
DO NOT WRITE IN THIS AREA
DO NOT WRITE IN THIS AREA

DO NOT WRITE IN THIS AREA
DO NOT WRITE IN THIS AREA
DO NOT WRITE IN THIS AREA

(d) The acceleration due to gravity, g, is related to T^2 and l by the equation

$$g = 4\pi^2 \times \frac{1}{\left(\frac{T^2}{l}\right)} \qquad [\pi = 3.14]$$

Use the gradient of the graph to calculate the value of g.

.....

.....

.....

.....

.....

.....

.....

.....

(4 marks)

GO ON TO THE NEXT PAGE

DO NOT WRITE IN THIS AREA DO NOT WRITE IN THIS AREA DO NOT WRITE IN THIS AREA

(e) Draw a clearly labelled diagram of a simple pendulum as it was used in this investigation.

(4 marks)

Total 25 marks

DO NOT WRITE IN THIS AREA
DO NOT WRITE IN THIS AREA
DO NOT WRITE IN THIS AREA

2. (a) (i) One of the things that physics is concerned with is the study of energy. Complete Table 2 to show two other major forms of energy and ONE example of each.

TABLE 2

Forms of Energy	Example
(1) Mechanical	A moving car/object.
(2)	
(3)	

(4 marks)

(ii) State the SI unit of energy.

.....

(1 mark)

(iii) Define the SI unit of energy named in (ii) above.

.....

.....

(2 marks)

(b) A bucket filled with cement of total mass 60 kg is raised vertically 150 m from the ground to the twelfth floor of a building under construction as shown in Figure 1.

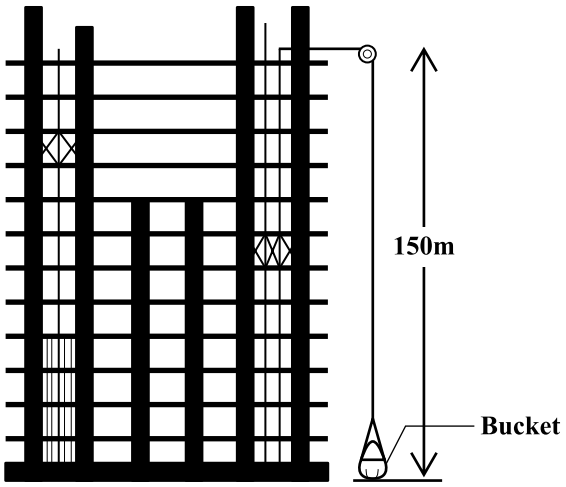

Figure 1

DO NOT WRITE IN THIS AREA
DO NOT WRITE IN THIS AREA
DO NOT WRITE IN THIS AREA

(i) Calculate the amount of energy that was needed to perform this activity. (Assume no frictional forces were present.)

.....

.....

.....

.....

.....

(3 marks)

(ii) If this activity takes 25 seconds to complete, calculate the power utilized in kilowatts.

.....

.....

.....

.....

.....

.....

(4 marks)

(iii) If friction was present, what effect if any, would this have on the power needed?

.....

.....

(1 mark)

(Gravitational field strength, g = 10 N kg^{-1})

Total 15 marks

DO NOT WRITE IN THIS AREA DO NOT WRITE IN THIS AREA DO NOT WRITE IN THIS AREA

3. (a) (i) Dr T likes to measure temperatures. From his temperature bag, shown in Figure 2, select the two temperatures to complete Table 3.

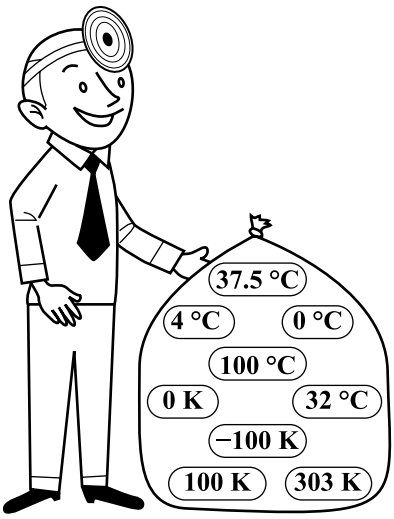

Figure 2

TABLE 3

Temperature – Fixed Points	Value from Dr T's Bag
(1) Upper fixed point	
(2) Lower fixed point	

(2 marks)

(ii) Define the term 'lower fixed point'.

.....

.....

(1 mark)

GO ON TO THE NEXT PAGE

0123802010

DO NOT WRITE IN THIS AREA
DO NOT WRITE IN THIS AREA
DO NOT WRITE IN THIS AREA

(iii) In Table 4, enter the names of two different types of thermometers and the corresponding physical quantity which varies with temperature.

TABLE 4

Type of Thermometer	Physical Quantity
(1)	
(2)	

(4 marks)

(b) A motor car tyre contained a fixed mass of air at 27 °C. Its pressure was 220 kN m^{-2} above atmospheric pressure. After a 60-minute drive, the air pressure rose to 250 kN m^{-2} above atmospheric pressure.

What was the new temperature of the air in the tyre, in degrees Celsius, if the volume of air remained constant?

.....

.....

.....

.....

.....

.....

.....

.....

.....

.....

.....

.....

(8 marks)

(Atmospheric pressure = 100 k Nm^{-2})

Total 15 marks

GO ON TO THE NEXT PAGE

0123802011

DO NOT WRITE IN THIS AREA DO NOT WRITE IN THIS AREA DO NOT WRITE IN THIS AREA

SECTION B

Answer ALL questions.

You MUST write your answers in the spaces provided after each question.

4. (a) (i) With the aid of a labelled diagram, state the laws of reflection. **(4 marks)**

(ii) The glare of light from oncoming vehicles when driving on a rainy nights can be annoying. With the aid of a labelled diagram, show how this glare results. **(2 marks)**

Write your answer to Question 4 (a) (i) here.

Diagram for Question 4 (a) (i)

.....

.....

.....

.....

.....

.....

DO NOT WRITE IN THIS AREA DO NOT WRITE IN THIS AREA DO NOT WRITE IN THIS AREA

Write your answer to Question 4 (a) (ii) here.

Diagram for Question 4 (a) (ii)

.....

.....

.....

.....

.....

.....

DO NOT WRITE IN THIS AREA
DO NOT WRITE IN THIS AREA
DO NOT WRITE IN THIS AREA

(b) A pencil is placed in a glass of water and appears to be bent as shown in Figure 3 below.

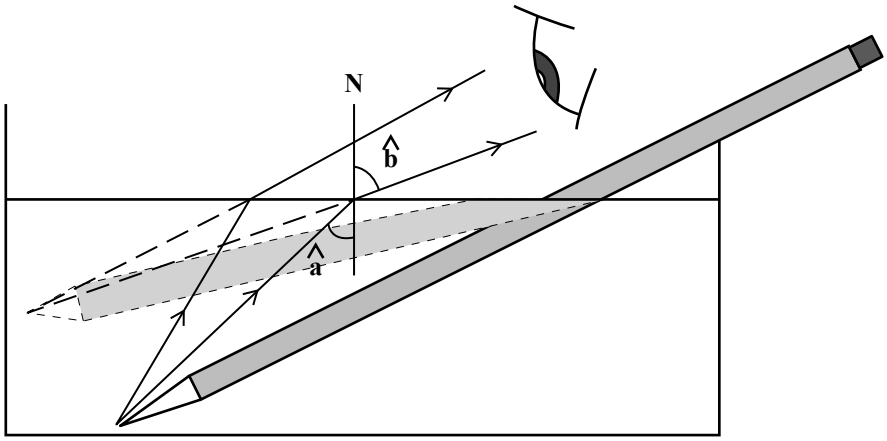

Figure 3

(i) Calculate the refractive index of the water which causes this apparent bending if angle $a = 32°$ and angle $b = 45°$. **(3 marks)**

(ii) If the pencil is now placed in ethanol with a refractive index of 1.36, calculate the new angle b given that angle a in the ethanol remains at 32°. **(4 marks)**

(iii) Does the pencil bend more or less in ethanol than in water? Justify your answer. **(2 marks)**

DO NOT WRITE IN THIS AREA
DO NOT WRITE IN THIS AREA
DO NOT WRITE IN THIS AREA

Write your answer to Question 4 (b) here.

(b) (i) .....

.....

.....

.....

.....

.....

.....

.....

.....

.....

(ii) .....

.....

.....

.....

.....

.....

.....

.....

(iii) .....

.....

.....

.....

.....

Total 15 marks

DO NOT WRITE IN THIS AREA DO NOT WRITE IN THIS AREA DO NOT WRITE IN THIS AREA

5. (a) (i) State the formula that relates the potential difference across a metallic conductor at constant temperature to the current through it. **(1 mark)**

(ii) State the formula that expresses the total resistance, R_T, of two resistors, R_1 and R_2 in parallel. **(1 mark)**

Write your answer to Question 5 (a) here.

(a) (i) .....

.....

.....

.....

(ii) .....

.....

.....

.....

DO NOT WRITE IN THIS AREA DO NOT WRITE IN THIS AREA DO NOT WRITE IN THIS AREA

(b) The brightness of the incandescent bulb in Figure 4 may be increased by varying the rheostat between 0 Ω and 100 Ω. When lit, the bulb operates at 0.30 A and 3.0 V.

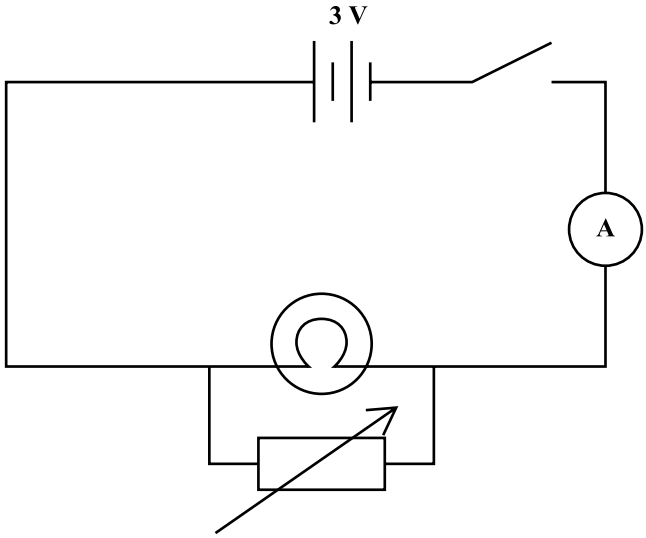

Figure 4

(i) What is the resistance of the bulb? **(2 marks)**

(ii) Assuming the resistance of the bulb remains constant once lit, calculate the ammeter reading if the rheostat is set to 100 Ω. **(4 marks)**

(iii) Is there a danger in reducing the rheostat resistance too much? Explain. **(3 marks)**

(iv) The assumption made in (b) (ii) is incorrect. With the aid of an I–V graph, indicate how the bulb's resistance actually varies with current. **(4 marks)**

DO NOT WRITE IN THIS AREA DO NOT WRITE IN THIS AREA DO NOT WRITE IN THIS AREA

Write your answer to Question 5 (b) here.

(b) (i) .....

.....

.....

.....

.....

.....

(ii) .....

.....

.....

.....

.....

.....

.....

.....

.....

.....

(iii) .....

.....

.....

.....

.....

.....

.....

DO NOT WRITE IN THIS AREA DO NOT WRITE IN THIS AREA DO NOT WRITE IN THIS AREA

(iv)

.....

.....

.....

.....

.....

Total 15 marks

DO NOT WRITE IN THIS AREA DO NOT WRITE IN THIS AREA DO NOT WRITE IN THIS AREA

6. (a) In order to separate the emissions from a radioactive source, they are subjected to a uniform electric field, E, perpendicular to their path as shown in Figure 5.

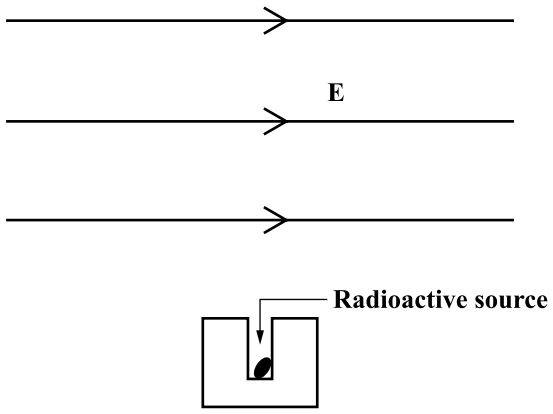

Figure 5

(i) Describe the path of each of the three emissions (α, β and γ) when subjected to a uniform electric field from left if the emissions are projected up towards the top of your page. **(3 marks)**

(ii) If the electric field is replaced by a uniform magnetic field **into the page**, predict the path of the emissions. **(3 marks)**

Write your answer to Question 6 (a) here.

(a) (i) .....

.....

.....

.....

.....

.....

.....

.....

.....

DO NOT WRITE IN THIS AREA
DO NOT WRITE IN THIS AREA
DO NOT WRITE IN THIS AREA

(ii) .....

.....

.....

.....

.....

.....

.....

.....

DO NOT WRITE IN THIS AREA
DO NOT WRITE IN THIS AREA
DO NOT WRITE IN THIS AREA

(b) One isotope of lead $^{210}_{82}Pb$, is not stable but can undergo exactly three distinct decays of an alpha or beta particle to become stable lead.

With reference to the information in Table 5, write a possible sequence of three nuclear equations that can result in $^{206}_{82}Pb$ (stable lead) from $^{210}_{82}Pb$.

TABLE 5

Element	Atomic Number
Bi	83
Po	84

(6 marks)

Write your answer to Question 6 (b) here.

(b) .....

.....

.....

.....

.....

.....

.....

DO NOT WRITE IN THIS AREA DO NOT WRITE IN THIS AREA DO NOT WRITE IN THIS AREA

(c) Calculate the energy given off in a nuclear reaction if the change in mass is 0.2014 u.

(3 marks)

($u = 1.66 \times 10^{-27}$ kg; $c = 3.0 \times 10^{8}$ ms^{-1}).

Write your answer to Question 6 (c) here.

Total 15 marks

END OF TEST

IF YOU FINISH BEFORE TIME IS CALLED, CHECK YOUR WORK ON THIS TEST.

DO NOT WRITE IN THIS AREA DO NOT WRITE IN THIS AREA DO NOT WRITE IN THIS AREA