FORM TP 2016022

TEST CODE **01238020**

JANUARY 2016

CARIBBEAN EXAMINATIONS COUNCIL

CARIBBEAN SECONDARY EDUCATION CERTIFICATE®
EXAMINATION

PHYSICS

Paper 02 – General Proficiency

2 hours 30 minutes

READ THE FOLLOWING INSTRUCTIONS CAREFULLY.

1. This paper consists of two sections: A and B.
2. Section A consists of THREE questions. Candidates must attempt ALL questions in this section.
3. Section B consists of THREE questions. Candidates must attempt ALL questions in this section.
4. All answers MUST be written in this answer booklet.
5. Do NOT write in the margins.
6. All working MUST be clearly shown.
7. You may use a silent, non-programmable calculator, but you should note that the use of an inappropriate number of figures in answers will be penalized.
8. Mathematical tables are provided.
9. If you need to rewrite any answer and there is not enough space to do so on the original page, you must use the extra lined page(s) provided at the back of this booklet. **Remember to draw a line through your original answer.**
10. **If you use the extra page(s) you MUST write the question number clearly in the box provided at the top of the extra page(s) and, where relevant, include the question part beside the answer.**

DO NOT TURN THIS PAGE UNTIL YOU ARE TOLD TO DO SO.

Copyright © 2015 Caribbean Examinations Council
All rights reserved.

SECTION A

Answer ALL questions.

You MUST write your answers in this answer booklet.

1. A motorcar travelled from rest and its velocity over an 80-second period was measured. The results are shown in Table 1.

TABLE 1

Velocity, v (m s^{-1})	0	30	30	30	0
Time, *t* (*s*)	0	20	40	60	80
Point	A	B	C	D	E

(a) **On the grid provided on page 5**, plot the graph of velocity against time. **(7 marks)**

(b) Use the graph to determine EACH of the following:

(i) The acceleration during the interval AB

.....

.....

.....

.....

.....

(4 marks)

(ii) The velocity of the motorcar after 70 seconds (with the aid of dotted lines)

.....

.....

.....

(1 mark)

GO ON TO THE NEXT PAGE

DO NOT WRITE IN THIS AREA DO NOT WRITE IN THIS AREA DO NOT WRITE IN THIS AREA

DO NOT WRITE IN THIS AREA
DO NOT WRITE IN THIS AREA
DO NOT WRITE IN THIS AREA

(iii) The total distance travelled over the 80 second period

.....

.....

.....

.....

.....

.....

.....

.....

.....

.....

(9 marks)

(c) From your graph, describe the velocity of the vehicle over the period BC.

.....

.....

.....

(1 mark)

(d) This question investigated how velocity varied with time. Define the term 'velocity'.

.....

.....

.....

.....

(3 marks)

Total 25 marks

DO NOT WRITE IN THIS AREA DO NOT WRITE IN THIS AREA DO NOT WRITE IN THIS AREA

DO NOT WRITE IN THIS AREA DO NOT WRITE IN THIS AREA DO NOT WRITE IN THIS AREA

2. (a) Complete the graphic below by drawing an arrow from each physical quantity to its respective unit.

Physical Quantity	**Unit**
Density	N m
Moment	N s
Linear Momentum	kg m^{-3}

(2 marks)

(b) Complete the following statements.

(i) Kinetic energy is defined as .....

.....

(1 mark)

(ii) The potential energy of a body is defined as .....

.....

(1 mark)

(iii) The formula for the change in gravitational potential energy is .....

.....

(1 mark)

(iv) Waterfalls are commonly found across the Caribbean. Describe the energy changes taking place in a waterfall.

.....

.....

.....

.....

.....

.....

(2 marks)

(c) A pendulum swings from A through B to C and returns to A as seen in Figure 1.

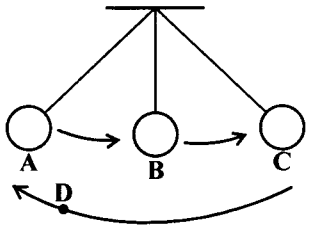

Figure 1

A and C are the furthest points with B being the midpoint.

State the type of energy that exists at

(i) A .....

.....

(1 mark)

(ii) B .....

.....

(1 mark)

(iii) C .....

.....

(1 mark)

(iv) Another point D, is situated midway between A and B.

If the pendulum is returning to A to complete an oscillation, explain which type of energy is increasing and why.

At D, the type of energy increasing is .....

.....

Reason: .....

.....

.....

(2 marks)

GO ON TO THE NEXT PAGE

DO NOT WRITE IN THIS AREA
DO NOT WRITE IN THIS AREA
DO NOT WRITE IN THIS AREA

(d) Netball is a popular sport played across the Caribbean.

If a netball has a mass of 0.4 kg and a velocity of 5 m s^{-1}, calculate its kinetic energy.

.....

.....

.....

.....

(3 marks)

Total 15 marks

DO NOT WRITE IN THIS AREA
DO NOT WRITE IN THIS AREA
DO NOT WRITE IN THIS AREA

3. (a) Table 2 shows the type of thermometer, design feature and the reason for the design feature. Complete the table by inserting the appropriate information.

TABLE 2

Type of Thermometer	Design Feature	Reason For Design Feature
Mercury-in-glass laboratory thermometer	Narrow bore	
	Constriction in bore	Retaining a measured temperature
Thermocouple		Ability to measure rapidly changing temperatures

(3 marks)

(b) Define the upper and lower fixed points on the Celsius temperature scale and state their respective values on that scale.

.....

.....

.....

.....

.....

.....

(4 marks)

DO NOT WRITE IN THIS AREA
DO NOT WRITE IN THIS AREA
DO NOT WRITE IN THIS AREA

(c) Figure 2 shows a sealed flask which contains a fixed mass of gas held at constant volume.

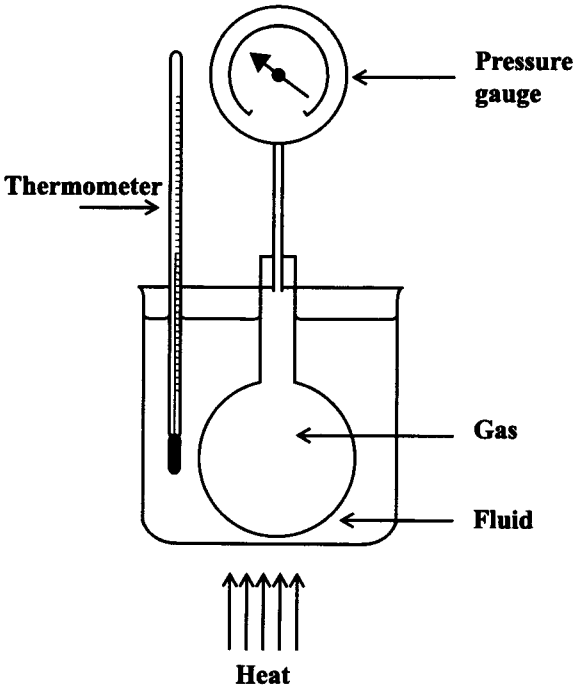

Figure 2

When heated, the temperature and pressure of the gas increase as shown in Table 3.

TABLE 3

Pressure (Pa)	Temperature (°C)	Temperature (K)
1.1×10^5	35	
1.2×10^5	63	
1.3×10^5	91	

(i) Complete Table 3 by converting the temperatures to Kelvin. **(3 marks)**

DO NOT WRITE IN THIS AREA
DO NOT WRITE IN THIS AREA
DO NOT WRITE IN THIS AREA

(ii) Is the 'Pressure Law' supported by this set of data? Explain.

.....

.....

.....

.....

.....

.....

(5 marks)

Total 15 marks

DO NOT WRITE IN THIS AREA
DO NOT WRITE IN THIS AREA
DO NOT WRITE IN THIS AREA

SECTION B

Answer ALL questions.

You MUST write your answers in this answer booklet.

4. (a) (i) "The angle of incidence is equal to the angle of reflection". This is one of the laws of reflection. State the other law.

.....

.....

.....

.....

(3 marks)

(ii) State THREE properties of the image in a plane mirror.

.....

.....

.....

.....

.....

.....

(3 marks)

DO NOT WRITE IN THIS AREA
DO NOT WRITE IN THIS AREA
DO NOT WRITE IN THIS AREA

(b) Figure 3 shows a car located 5 m behind a truck which is 8 m long. Assume the external mirror for the truck is a plane mirror and is in line with the front of the truck.

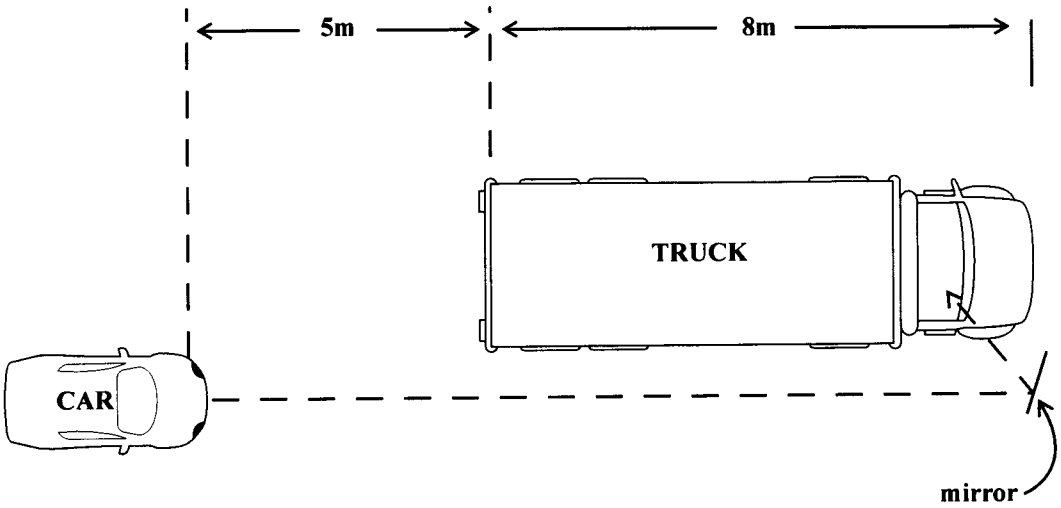

Figure 3

(i) Calculate the image distance of the car as seen by the truck driver.

.....

.....

.....

.....

(2 marks)

GO ON TO THE NEXT PAGE

DO NOT WRITE IN THIS AREA
DO NOT WRITE IN THIS AREA
DO NOT WRITE IN THIS AREA

(ii) State a reason why the sign shown in Figure 4 is more likely to be posted at the back of a truck rather than a car.

Figure 4

.....

.....

.....

.....

(2 marks)

DO NOT WRITE IN THIS AREA
DO NOT WRITE IN THIS AREA
DO NOT WRITE IN THIS AREA

(c) A ray of light passes through a block of material as shown in Figure 5.

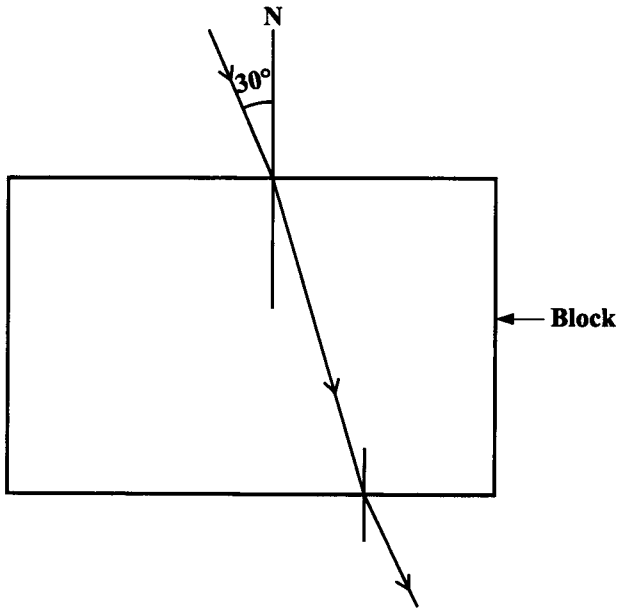

Figure 5

(i) If the refractive index of the material is 1.3, calculate the angle of refraction in the material given that the angle of incidence is 30°.

.....

.....

.....

.....

(4 marks)

(ii) If the refractive index of the material increased, why would the lateral displacement of the ray increase also?

.....

.....

.....

.....

(1 mark)

Total 15 marks

GO ON TO THE NEXT PAGE

DO NOT WRITE IN THIS AREA
DO NOT WRITE IN THIS AREA
DO NOT WRITE IN THIS AREA

DO NOT WRITE IN THIS AREA DO NOT WRITE IN THIS AREA DO NOT WRITE IN THIS AREA

5. (a) A converging lens can be used to form real or virtual images.

(i) With reference to the focal lengh of the lens, describe the object distance required to produce EACH type of image.

.....

.....

.....

.....

(2 marks)

(ii) State the orientation of EACH image so produced.

.....

.....

.....

.....

(2 marks)

(iii) Complete the ray diagram shown in Figure 6.

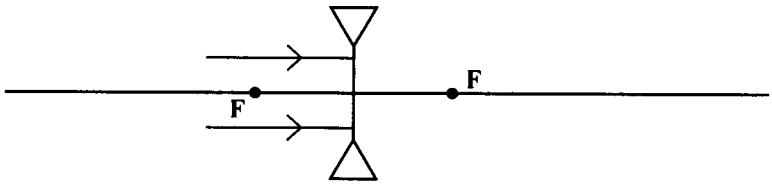

Figure 6

(2 marks)

(b) (i) Calculate the magnification where a lens produces an image height of 3.6 mm for an object 2.4 mm in height.

.....

.....

.....

.....

(3 marks)

(ii) For the same magnification, calculate the image distance given that the object distance is 20 cm.

.....

.....

.....

.....

(3 marks)

(iii) Calculate the focal length of this lens.

.....

.....

.....

.....

(3 marks)

Total 15 marks

DO NOT WRITE IN THIS AREA DO NOT WRITE IN THIS AREA DO NOT WRITE IN THIS AREA

6. (a) Scientists use symbols when dealing with circuit diagrams in electricity. An electric circuit is displayed in Figure 7.

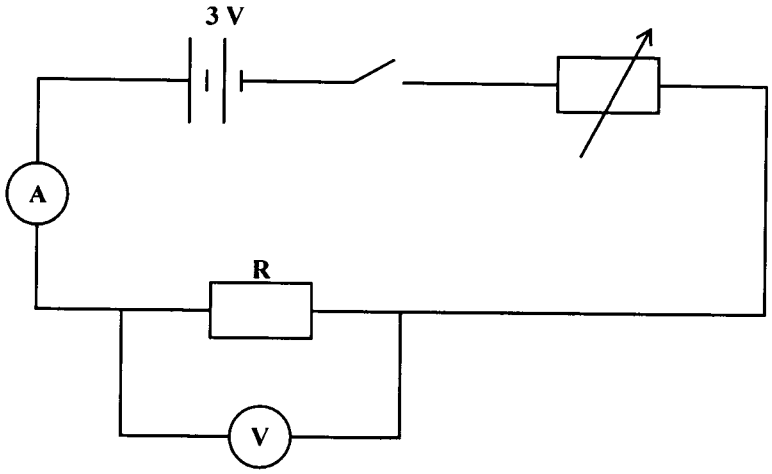

Figure 7

Write a description of this circuit in the space provided.

.....

.....

.....

.....

.....

.....

.....

.....

.....

.....

(6 marks)

DO NOT WRITE IN THIS AREA
DO NOT WRITE IN THIS AREA
DO NOT WRITE IN THIS AREA

(b) A Physics class was given a circuit diagram as shown in Figure 8. Use Figure 8 to answer the three questions posed to the class.

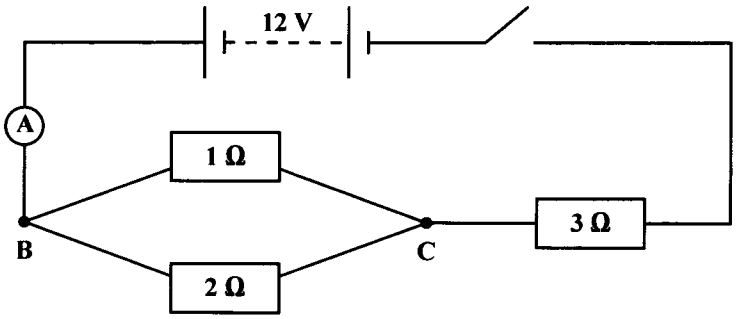

Figure 8

(i) Given that the formula for the equivalent resistance of two resistors R_1 and R_2 in parallel is $R = \frac{R_1 R_2}{R_1 + R_2}$, calculate the equivalent resistance across BC.

.....

.....

.....

.....

(2 marks)

(ii) Calculate the current flowing in the closed circuit.

.....

.....

.....

.....

(4 marks)

GO ON TO THE NEXT PAGE

DO NOT WRITE IN THIS AREA DO NOT WRITE IN THIS AREA DO NOT WRITE IN THIS AREA

(iii) When the current in (b) (ii) flows, what is the power dissipated in the 3Ω resistor?

.....

.....

.....

.....

(3 marks)

Total 15 marks

END OF TEST

IF YOU FINISH BEFORE TIME IS CALLED, CHECK YOUR WORK ON THIS TEST.

DO NOT WRITE IN THIS AREA DO NOT WRITE IN THIS AREA DO NOT WRITE IN THIS AREA

EXTRA SPACE

If you use this extra page, you MUST write the question number clearly in the box provided.

Question No.

DO NOT WRITE IN THIS AREA
DO NOT WRITE IN THIS AREA
DO NOT WRITE IN THIS AREA