FORM TP 2015100

TEST CODE **01238020**

MAY/JUNE 2015

CARIBBEAN EXAMINATIONS COUNCIL

CARIBBEAN SECONDARY EDUCATION CERTIFICATE®
EXAMINATION

PHYSICS

Paper 02 – General Proficiency

2 hours 30 minutes

READ THE FOLLOWING INSTRUCTIONS CAREFULLY.

1. This paper consists of TWO sections: A and B.
2. Section A consists of THREE questions. Candidates must attempt ALL questions in this section.
3. Section B consists of THREE questions. Candidates must attempt ALL questions in this section.
4. ALL answers MUST be written in this answer booklet.
5. All working MUST be clearly shown.
6. Do NOT write in the margins.
7. You may use a silent, non-programmable calculator, but you should note that the use of an inappropriate number of figures in answers will be penalized.
8. Mathematical tables are provided.
9. If you need to rewrite any answer and there is not enough space to do so on the original page, you must use the extra lined page(s) provided at the back of this booklet. **Remember to draw a line through your original answer.**
10. **If you use the extra page(s), you MUST write the question number clearly in the box provided at the top of the extra page(s) and, where relevant, include the question part beside the answer.**

DO NOT TURN THIS PAGE UNTIL YOU ARE TOLD TO DO SO.

Copyright © 2014 Caribbean Examinations Council
All rights reserved.

SECTION A

Answer ALL questions.

1. The activity of a radioactive sample was measured over a 24-day period. The results are recorded in Table 1.

TABLE 1

Time (*t*) days	**Activity (*A*) Disintegrations per second**
0	40.0
4	29.5
8	20.0
12	14.0
16	10.0
20	6.5
24	5.0

(a) Plot a graph, **on page 3**, of Activity (A) versus Time (t). **(8 marks)**

DO NOT WRITE IN THIS AREA DO NOT WRITE IN THIS AREA DO NOT WRITE IN THIS AREA

DO NOT WRITE IN THIS AREA
DO NOT WRITE IN THIS AREA
DO NOT WRITE IN THIS AREA

(b) Using your graph, calculate the **average** half-life of the sample, determined from the average of two or three values.

.....

.....

.....

.....

.....

.....

.....

.....

.....

.....

.....

.....

.....

.....

.....

.....

.....

.....

(12 marks)

DO NOT WRITE IN THIS AREA DO NOT WRITE IN THIS AREA DO NOT WRITE IN THIS AREA

(c) Use the graph to determine the activity of the sample after 25 days.

.....

.....

.....

(2 marks)

(d) (i) State TWO types of radioactive emissions.

(1) .....

(2) .....

(2 marks)

(ii) Which type of radioactive emission is the **most** dangerous to human tissue?

.....

(1 mark)

Total 25 marks

DO NOT WRITE IN THIS AREA
DO NOT WRITE IN THIS AREA
DO NOT WRITE IN THIS AREA

2. (a) This question concerns thermal heat capacities.

(i) In the box below, state the equation that relates C to c.

(1 mark)

(ii) State the name of the physical quantity that each letter represents.

C: .....

.....

c: .....

.....

(2 marks)

(iii) Distinguish between *'C'* and *'c'*.

.....

.....

.....

.....

.....

(2 marks)

DO NOT WRITE IN THIS AREA DO NOT WRITE IN THIS AREA DO NOT WRITE IN THIS AREA

(b) A substance which has a melting point of 80 °C is cooled from 90 °C to a complete solid at its melting point.

Sketch a graph in Figure 1 to represent the statement above.

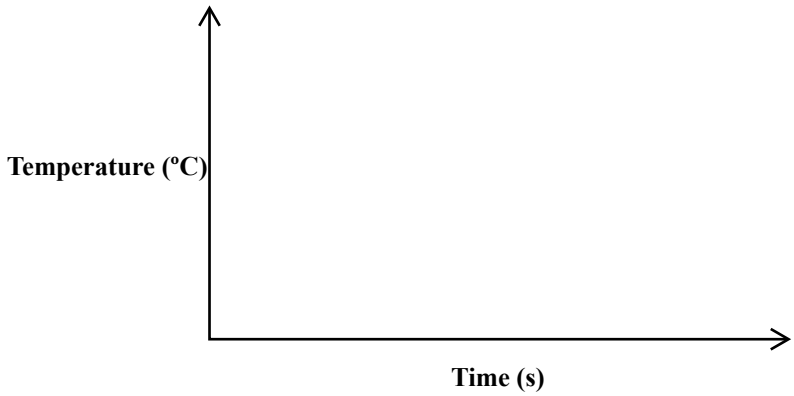

Figure 1

(2 marks)

(c) A physicist converted 2 kg of water at 37 °C to steam at 100 °C.

Assuming no heat is lost, calculate the amount of energy needed

(i) to heat the water to 100 °C

.....

.....

.....

.....

(4 marks)

(ii) to heat the water from 100 °C to steam at 100 °C.

.....

.....

.....

.....

(3 marks)

DO NOT WRITE IN THIS AREA
DO NOT WRITE IN THIS AREA
DO NOT WRITE IN THIS AREA

(iii) to completely convert the water from 37 °C to steam at 100 °C.

.....

.....

(1 mark)

(Specific heat capacity of water = 4200 J kg^{-1} K^{-1}
Specific latent heat of vaporization of water = 2.3×10^6 J kg^{-1})

Total 15 marks

DO NOT WRITE IN THIS AREA
DO NOT WRITE IN THIS AREA
DO NOT WRITE IN THIS AREA

3. (a) (i) Explain what is meant by the term 'electrical resistance'.

.....

.....

(1 mark)

(ii) Complete Table 2 to provide information regarding electrical meters.

TABLE 2

Meter	**How Connected in a Circuit (Series or Parallel)**	**Resistance (High or Low)**	**Reason for Size of Resistance**
Ammeter			....
Voltmeter			....

(6 marks)

DO NOT WRITE IN THIS AREA
DO NOT WRITE IN THIS AREA
DO NOT WRITE IN THIS AREA

(b) Calculate the reading on EACH of the meters shown in the circuit in Figure 2 when the switch is closed.

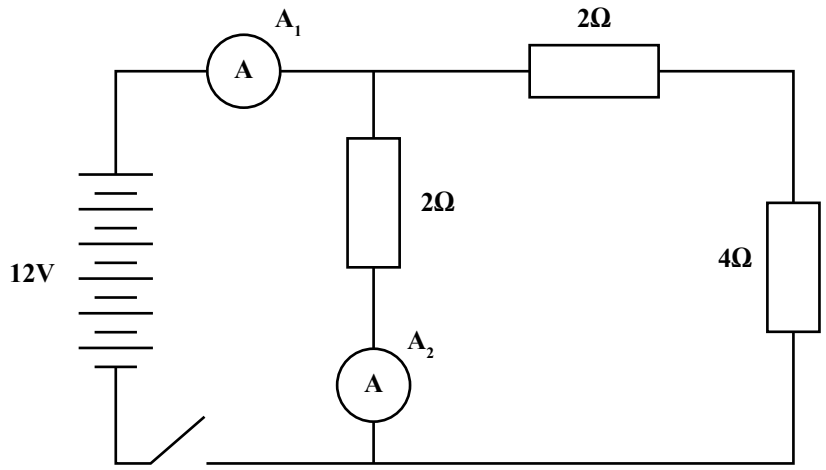

Figure 2

(i) Reading on A_1

.....

.....

.....

.....

.....

.....

(6 marks)

(ii) Reading on A_2

.....

.....

.....

.....

(2 marks)

Total 15 marks

GO ON TO THE NEXT PAGE

0123802012

DO NOT WRITE IN THIS AREA DO NOT WRITE IN THIS AREA DO NOT WRITE IN THIS AREA

DO NOT WRITE IN THIS AREA
DO NOT WRITE IN THIS AREA
DO NOT WRITE IN THIS AREA

SECTION B

Answer ALL questions.

4. (a) State Newton's three laws of motion.

.....

.....

.....

.....

.....

.....

.....

.....

.....

.....

.....

.....

(6 marks)

(b) In a crash test, a car travelling at a constant velocity of 26 m s^{-1} crashes into a wall and is brought to rest.

(i) Calculate the initial momentum of a 70 kg test dummy in the car before the crash.

.....

.....

.....

.....

.....

.....

(3 marks)

(ii) Calculate the average force exerted on the dummy by the seatbelt during the crash if the duration of the collision is 0.1 seconds.

.....

.....

.....

.....

.....

.....

.....

.....

.....

.....

(3 marks)

DO NOT WRITE IN THIS AREA DO NOT WRITE IN THIS AREA DO NOT WRITE IN THIS AREA

(iii) With the removal of all protective features, the dummy was subjected to another crash test with the same initial speed. This time it was subjected to a 'lethal' decelerating force of 45 000 N. Calculate the duration of this collision.

.....

.....

.....

.....

.....

.....

.....

.....

(3 marks)

Total 15 marks

DO NOT WRITE IN THIS AREA
DO NOT WRITE IN THIS AREA
DO NOT WRITE IN THIS AREA

5. (a) (i) Describe how the graph of Volume versus Temperature (in Celsius) of a gas can be used to derive the Kelvin scale?

.....

.....

.....

.....

.....

.....

.....

.....

(4 marks)

(ii) State the mathematical relationship between the Kelvin and Celsius temperature scales.

.....

.....

.....

.....

.....

.....

.....

(2 marks)

DO NOT WRITE IN THIS AREA DO NOT WRITE IN THIS AREA DO NOT WRITE IN THIS AREA

(b) A piston traps a mass of gas in a cylinder. At 25 °C, the pressure of the gas is 5 atmospheres when its volume is 50 ml.

(i) Calculate the volume of the gas if its pressure drops to 1 atmosphere at constant temperature.

.....

.....

.....

.....

.....

.....

.....

.....

.....

.....

.....

(4 marks)

DO NOT WRITE IN THIS AREA
DO NOT WRITE IN THIS AREA
DO NOT WRITE IN THIS AREA

(ii) After resetting the piston, the gas returns to its initial pressure and volume. If the volume is now fixed while the gas is heated to 60 °C, calculate the final pressure of the gas.

.....

.....

.....

.....

.....

.....

.....

.....

.....

.....

.....

.....

(5 marks)

Total 15 marks

DO NOT WRITE IN THIS AREA DO NOT WRITE IN THIS AREA DO NOT WRITE IN THIS AREA

6. (a) (i) Copy Figure 3 and draw the ray shown as it emerges on the other side of the lens and its relation to the focus. Show the principal axis and the focal length.

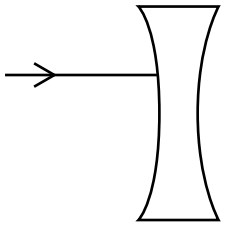

Figure 3

Space for diagram.

(5 marks)

(ii) Write, in words or symbols, the formula for the magnification of an object.

.....

.....

.....

.....

.....

.....

(1 mark)

DO NOT WRITE IN THIS AREA DO NOT WRITE IN THIS AREA DO NOT WRITE IN THIS AREA

(b) An object *AB* is placed 20 cm in front of a converging lens of focal length F, 10 cm as seen in Figure 4.

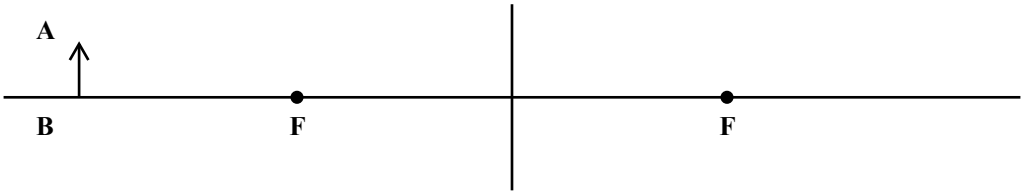

Figure 4

(i) Calculate the position of the image formed and state on what side of the lens it is located.

.....

.....

.....

.....

.....

.....

.....

(5 marks)

(ii) Calculate the magnification of the image formed.

.....

.....

.....

(3 marks)

(iii) Is the image formed real or virtual?

.....

.....

(1 mark)

Total 15 marks

END OF TEST

IF YOU FINISH BEFORE TIME IS CALLED, CHECK YOUR WORK ON THIS TEST.

DO NOT WRITE IN THIS AREA
DO NOT WRITE IN THIS AREA
DO NOT WRITE IN THIS AREA