FORM TP 2018097

TEST CODE **01238020**

MAY/JUNE 2018

CARIBBEAN EXAMINATIONS COUNCIL

CARIBBEAN SECONDARY EDUCATION CERTIFICATE®
EXAMINATION

PHYSICS

Paper 02 – General Proficiency

2 hours 30 minutes

READ THE FOLLOWING INSTRUCTIONS CAREFULLY.

1. This paper consists of SIX questions in TWO sections. Answer ALL questions.
2. Write your answers in the spaces provided in this booklet.
3. Do NOT write in the margins.
4. Where appropriate, ALL WORKING MUST BE SHOWN in this booklet.
5. You may use a silent, non-programmable calculator to answer questions, but you should note that the use of an inappropriate number of figures in answers will be penalized.
6. Mathematical tables are provided.
7. If you need to rewrite any answer and there is not enough space to do so on the original page, you must use the extra lined page(s) provided at the back of this booklet. **Remember to draw a line through your original answer.**
8. **If you use the extra page(s) you MUST write the question number clearly in the box provided at the top of the extra page(s) and, where relevant, include the question part beside the answer.**

DO NOT TURN THIS PAGE UNTIL YOU ARE TOLD TO DO SO.

Copyright © 2017 Caribbean Examinations Council
All rights reserved.

"*"Barcode Area"*"
Sequential Bar Code

SECTION A

Answer ALL questions.

1. In an experiment to determine the focal length of a convex lens, a group of fifth form students set up the apparatus shown in Figure 1.

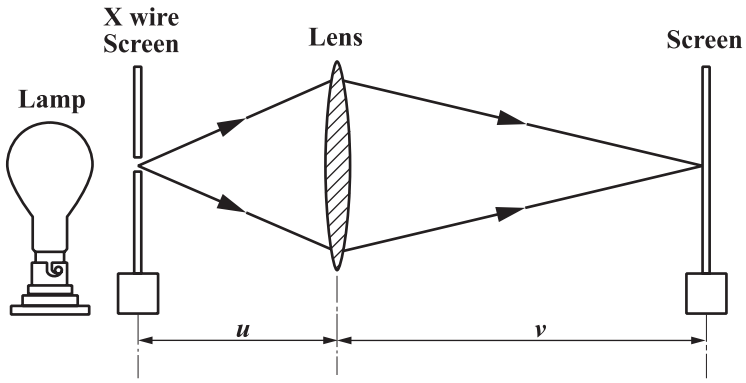

Figure 1. Apparatus to determine the focal length of a convex lens

The students measured object distances (u) and corresponding image distances (v) and recorded the information in Table 1.

TABLE 1: OBJECT DISTANCE (u) AND CORRESPONDING IMAGE DISTANCE (v)

u/cm	$\frac{1}{u}$ ( )	v/cm	$\frac{1}{v}$ ( )
20.0		55.6	
30.0		30.2	
40.0		23.8	
50.0		22.2	
60.0		20.0	
70.0		19.2	

(a) Complete Table 1 to show values for $\frac{1}{u}$ and $\frac{1}{v}$. [Include units and calculate to three significant figures.] **(6 marks)**

(b) On the grid provided **on page 5**, plot a graph of $\frac{1}{u}$ against $\frac{1}{v}$. **(7 marks)**

GO ON TO THE NEXT PAGE

"*"Barcode Area"*"
Sequential Bar Code

DO NOT WRITE IN THIS AREA
DO NOT WRITE IN THIS AREA
DO NOT WRITE IN THIS AREA

DO NOT WRITE IN THIS AREA
DO NOT WRITE IN THIS AREA
DO NOT WRITE IN THIS AREA

GO ON TO THE NEXT PAGE

"*"Barcode Area"*"
Sequential Bar Code

(c) (i) Calculate the gradient of the graph in (b) to one significant figure.

(4 marks)

(ii) State the value of the intercept, c, on the $\frac{1}{u}$ axis.

.....

.....

(1 mark)

(d) Given that $c = \frac{1}{f}$, determine f, the focal length of the lens.

(4 marks)

"*"Barcode Area"*"
Sequential Bar Code

DO NOT WRITE IN THIS AREA
DO NOT WRITE IN THIS AREA
DO NOT WRITE IN THIS AREA

(e) Complete Figure 2 to show the paths of rays 1, 2 and 3 as they pass through the convex lens represented by the dotted line.

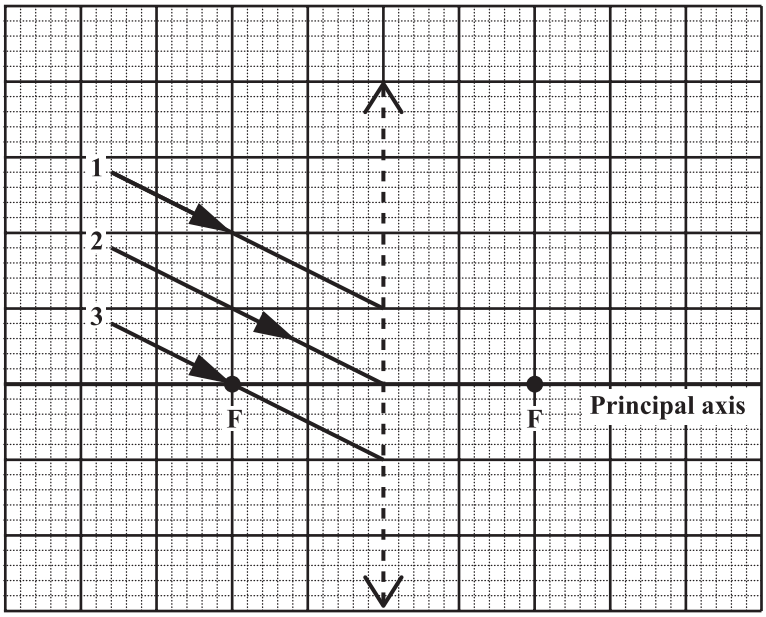

Figure 2. Paths of rays 1, 2 and 3

(3 marks)

Total 25 marks

"*"Barcode Area"*"
Sequential Bar Code

DO NOT WRITE IN THIS AREA
DO NOT WRITE IN THIS AREA
DO NOT WRITE IN THIS AREA

2. (a) (i) An atom consists of three types of particles: protons, neutrons and electrons.

Complete the following table to show the charge of EACH particle.

TABLE 2. CHARGE OF PARTICLES IN AN ATOM

Particle	Charge
Proton	_____
Neutron	_____
Electron	_____

(3 marks)

(ii) For the element $^{226}_{88}Ra$, determine the number of EACH of the three particles referred to in (a) (i).

Protons .....

.....

Neutrons .....

.....

Electrons .....

.....

(4 marks)

(iii) State ONE similarity and ONE difference between the isotopes of an element.

Similarity .....

.....

Difference .....

.....

(2 marks)

GO ON TO THE NEXT PAGE

"*"Barcode Area"*"
Sequential Bar Code

DO NOT WRITE IN THIS AREA
DO NOT WRITE IN THIS AREA
DO NOT WRITE IN THIS AREA

(b) (i) Define the term 'half-life' of a radioactive substance.

.....

.....

.....

.....

(2 marks)

(ii) The element thorium (Th) has a half-life of 24 days and undergoes beta-decay. Calculate the time it would take for 10 grams of thorium to decay to 1.25 grams.

(4 marks)

Total 15 marks

"*"Barcode Area"*"
Sequential Bar Code

DO NOT WRITE IN THIS AREA DO NOT WRITE IN THIS AREA DO NOT WRITE IN THIS AREA

3. (a) Define the term 'electric field'.

.....

.....

.....

.....

(3 marks)

(b) Draw the electric field formed between the parallel plates shown in Figure 3.

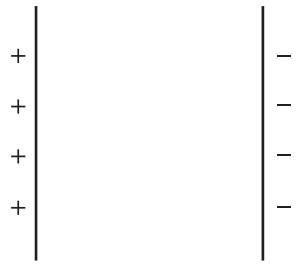

Figure 3. Parallel plates

(2 marks)

(c) A lightning strike is an example of an electrostatic hazard.

(i) State ONE **other** hazard of static charge.

.....

.....

(1 mark)

(ii) State ONE useful application of static charge.

.....

.....

(1 mark)

GO ON TO THE NEXT PAGE

"*"Barcode Area"*"
Sequential Bar Code

DO NOT WRITE IN THIS AREA
DO NOT WRITE IN THIS AREA
DO NOT WRITE IN THIS AREA

(d) The graph in Figure 4 shows the alternating voltage output from a generator.

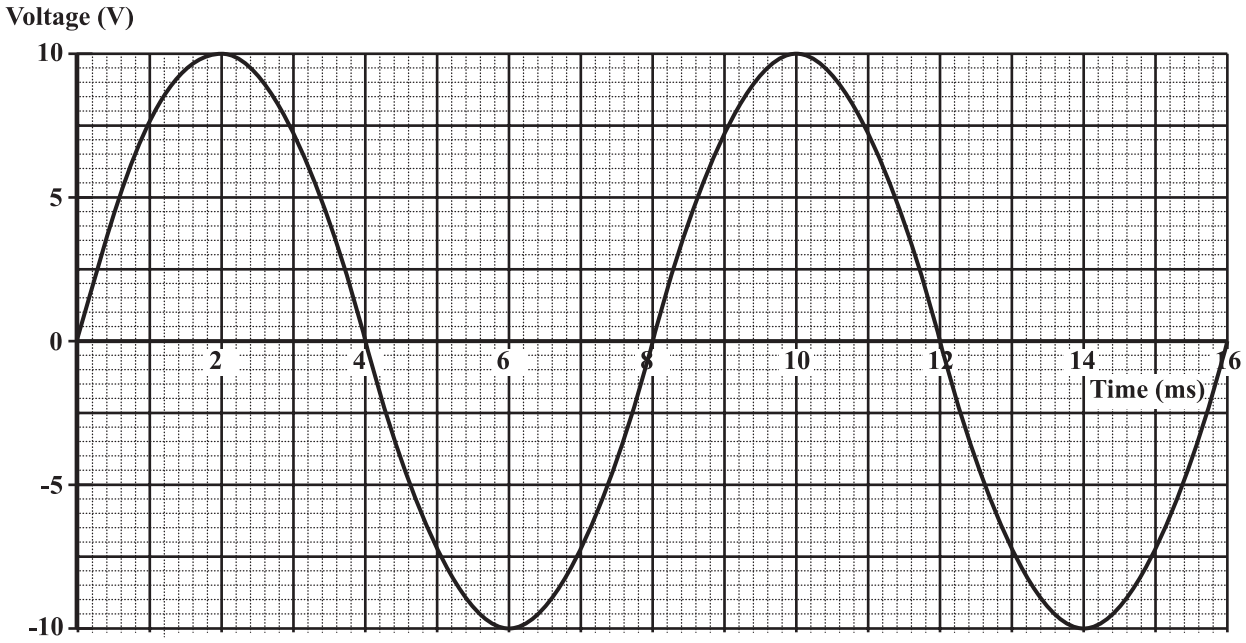

Figure 4. Alternating voltage output from a generator

Using the graph in Figure 4, determine the

(i) value of the peak to peak voltage

.....

.....

(2 marks)

(ii) period of the alternating voltage, in seconds

.....

.....

(2 marks)

(iii) frequency of the alternating voltage from the supply.

.....

.....

.....

(4 marks)

Total 15 marks

GO ON TO THE NEXT PAGE

"*"Barcode Area"*"
Sequential Bar Code

DO NOT WRITE IN THIS AREA
DO NOT WRITE IN THIS AREA
DO NOT WRITE IN THIS AREA

NOTHING HAS BEEN OMITTED.

"*"Barcode Area"*"
Sequential Bar Code

DO NOT WRITE IN THIS AREA
DO NOT WRITE IN THIS AREA
DO NOT WRITE IN THIS AREA

DO NOT WRITE IN THIS AREA
DO NOT WRITE IN THIS AREA
DO NOT WRITE IN THIS AREA

SECTION B

Answer ALL questions.

4. (a) (i) Define each of the following terms.

Specific heat capacity .....

.....

.....

.....

.....

.....

Heat capacity .....

.....

.....

.....

.....

.....

(5 marks)

(ii) Write the formula to show the relationship between the specific heat capacity, *c*, and heat capacity, *C*, of a body.

.....

.....

(1 mark)

"*"Barcode Area"*"
Sequential Bar Code

(b) Some students were asked to carry out an experiment to determine the specific heat capacity of a metal. They used the apparatus shown in Figure 5.

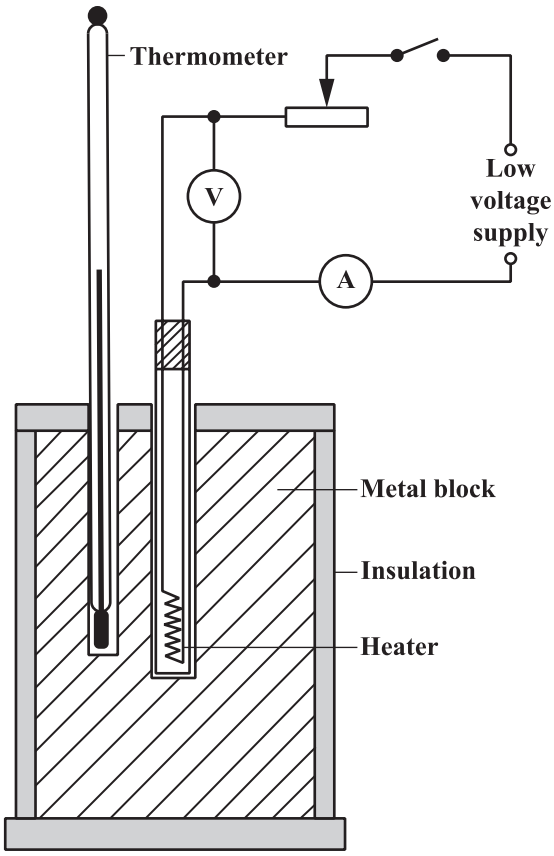

Figure 5. Apparatus to determine the specific heat capacity of a metal

The switch was closed for a time interval of 900 s and the following readings were obtained.

Mass of metal block = 5 kg

Change in temperature = 50 °C

Ammeter reading = 8.5 A

Voltmeter reading = 12 V

"*"Barcode Area"*"
Sequential Bar Code

DO NOT WRITE IN THIS AREA
DO NOT WRITE IN THIS AREA
DO NOT WRITE IN THIS AREA

Using the data **on page 14**, calculate the specific heat capacity of the metal, stating any assumption(s) made.

(9 marks)

Total 15 marks

"*"Barcode Area"*"
Sequential Bar Code

DO NOT WRITE IN THIS AREA
DO NOT WRITE IN THIS AREA
DO NOT WRITE IN THIS AREA

5. (a) (i) State Hooke's law.

.....

.....

.....

.....

.....

.....

(3 marks)

(ii) With the aid of a labelled, sketched graph, explain what is meant by 'elastic limit'.

(3 marks)

"*"Barcode Area"*"
Sequential Bar Code

DO NOT WRITE IN THIS AREA
DO NOT WRITE IN THIS AREA
DO NOT WRITE IN THIS AREA

(b) A steel spring has a spring constant of 2×10^2 N m^{-1}.

Calculate the weight of an object which when attached to the unloaded spring produces an extension of 50 mm. The elastic limit is NOT exceeded.

$$\left(\text{Spring Constant} = \frac{\text{Force}}{\text{Extension}} \right).$$

(5 marks)

(c) The object attached to the spring in (b) fell from rest and hit the ground after two seconds. Calculate the velocity of the object on hitting the ground.

[g = 10 m s^{-2}]

(4 marks)

Total 15 marks

GO ON TO THE NEXT PAGE

"*"Barcode Area"*"
Sequential Bar Code

DO NOT WRITE IN THIS AREA DO NOT WRITE IN THIS AREA DO NOT WRITE IN THIS AREA

6. (a) The transformer is a commonplace technological tool used in our daily lives. Figure 6 shows one type of transformer used in electricity distribution.

(i) State the name of the parts labelled A, B, C and D in Figure 6.

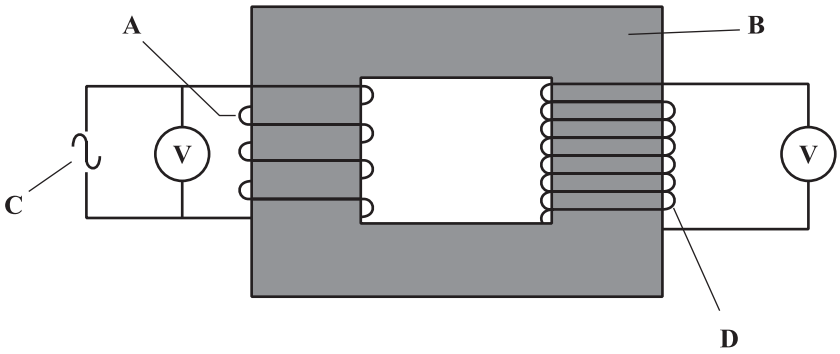

Figure 6. A transformer

A .....

B .....

C .....

D .....

(4 marks)

(ii) Identify the type of transformer shown in Figure 6.

.....

.....

(1 mark)

(iii) State the formula that relates voltage, *V,* to number of turns, *n,* in a transformer.

.....

.....

(1 mark)

GO ON TO THE NEXT PAGE

"*"Barcode Area"*"
Sequential Bar Code

DO NOT WRITE IN THIS AREA
DO NOT WRITE IN THIS AREA
DO NOT WRITE IN THIS AREA

DO NOT WRITE IN THIS AREA DO NOT WRITE IN THIS AREA DO NOT WRITE IN THIS AREA

(b) A transformer has 5000 turns in its secondary coil and 50 turns in its primary coil. The voltage supplied to its primary coil is 12.0 V a.c. and a current of 6.0 A flows in its primary coil.

Calculate

(i) the input power of the transformer

(4 marks)

(ii) the voltage across the secondary coil

(2 marks)

(iii) the maximum secondary current if the transformer is 100% efficient.

(3 marks)

Total 15 marks

END OF TEST

IF YOU FINISH BEFORE TIME IS CALLED, CHECK YOUR WORK ON THIS TEST.