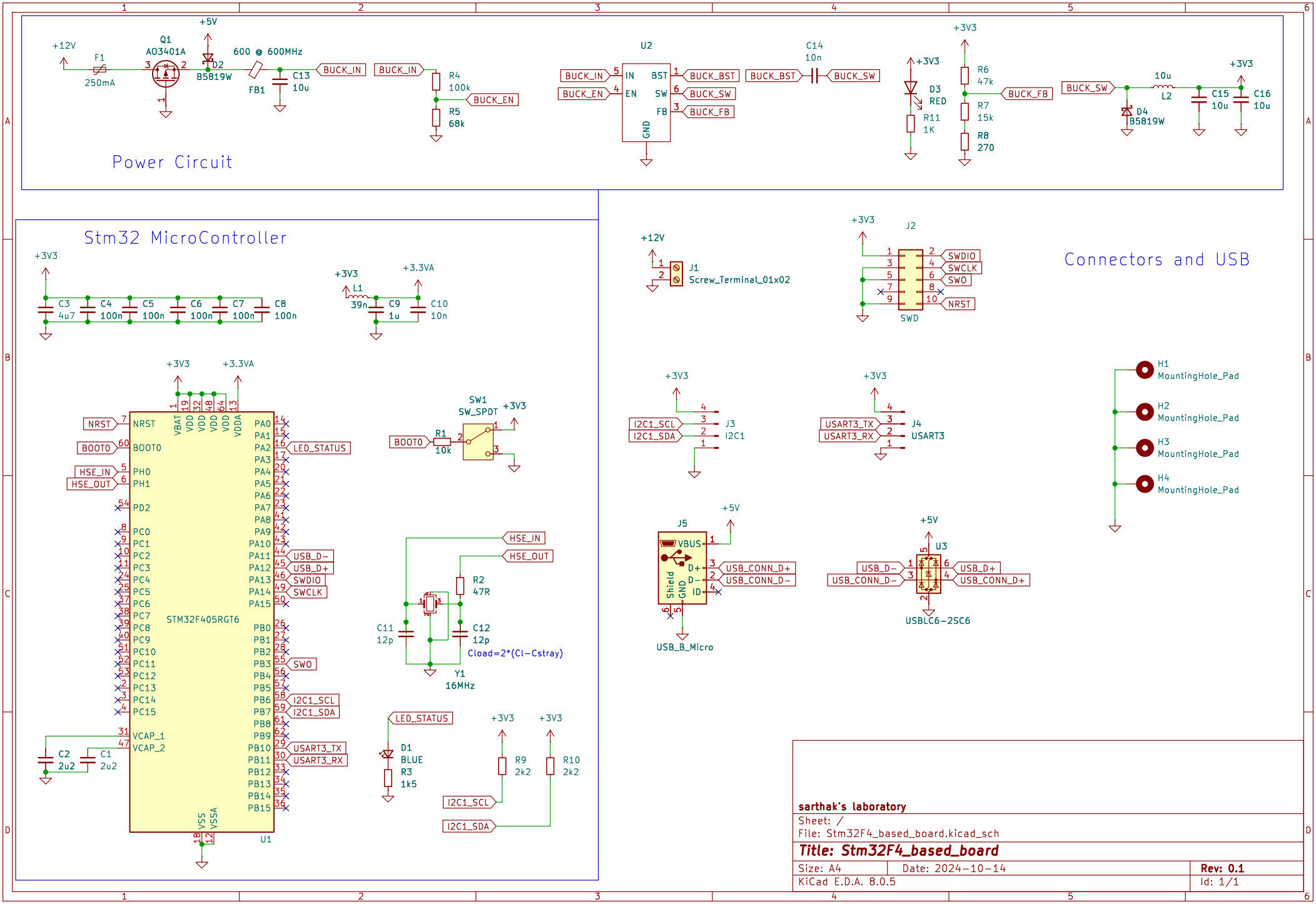

sarthak's laboratory

Sheet: /

File: Stm32F4_based_board.kicad_sch

Title: Stm32F4_based_board

Size: A4	Date: 2024−10−14	**Rev: 0.1**
KiCad E.D.A. 8.0.5		Id: 1/1