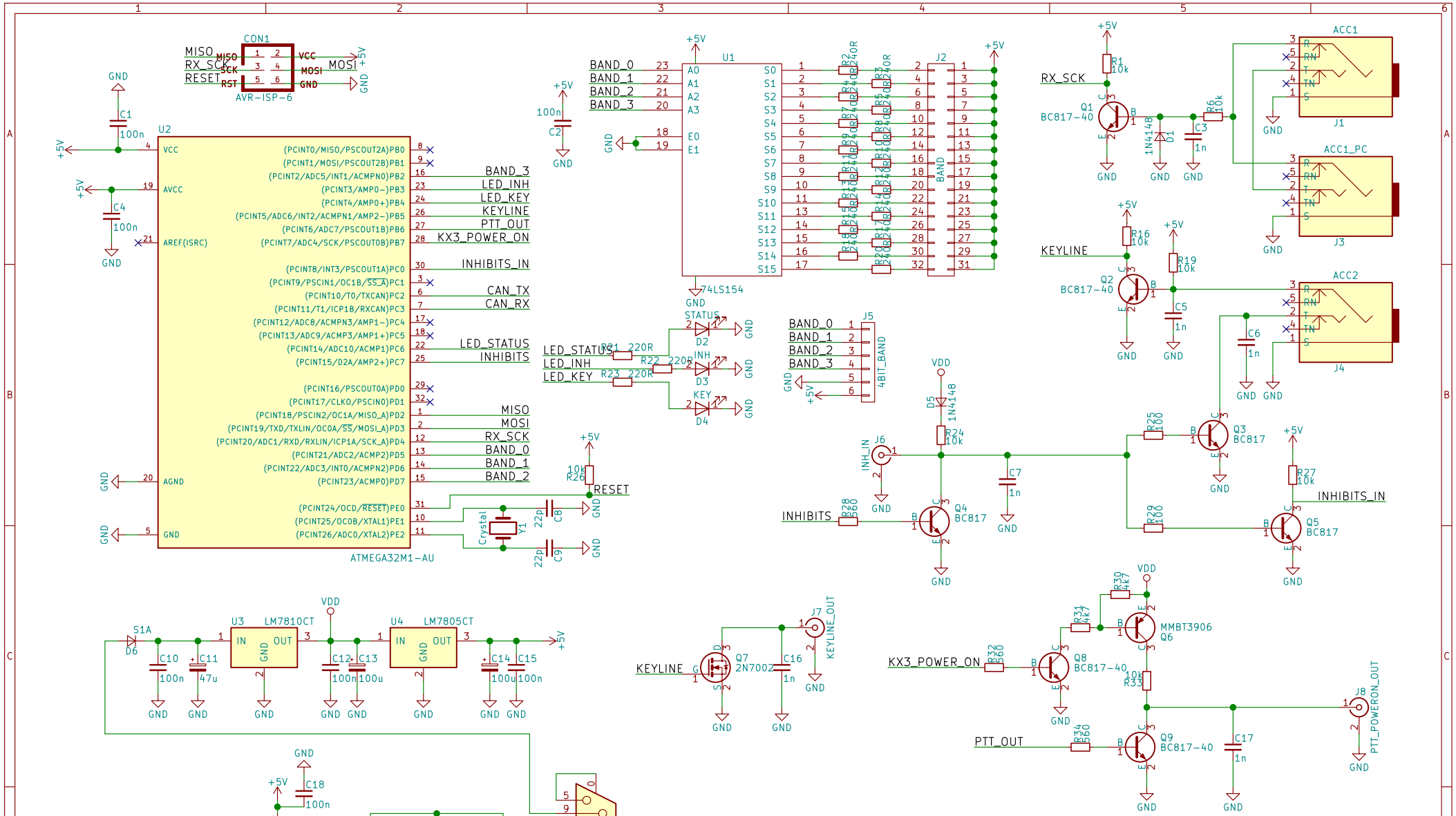
CON1
AVR-ISP-6
MISO
RX_SCK
RESET
MOSI
VCC
GND
U2
ATMEGA32M1-AU
BAND_3
LED_INH
LED_KEY
KEYLINE
PTT_OUT
KX3_POWER_ON
INHIBITS_IN
CAN_TX
CAN_RX
LED_STATUS
INHIBITS
BAND_0
BAND_1
BAND_2
Crystal
Y1
U1
74LS154
J2
BAND
J5
4BIT_BAND
ACC1
ACC1_PC
ACC2
J1
J3
J4
Q1
BC817-40
Q2
BC817-40
Q3
BC817
Q4
BC817
Q5
BC817
Q6
MMBT3906
Q7
2N7002
Q8
BC817-40
Q9
BC817-40
J6
INH_IN
J7
KEYLINE_OUT
J8
PTT_POWERON_OUT
U3
LM7810CT
U4
LM7805CT
S1A
D6
U5
MCP2551-I/SN
TXD
RXD
Vref
Rs
CANH
CANL
D7
NUP2105
CAN
J9
PWR_FLAG
SQ8KFH
Sheet: /
File: h9kx3.sch
Title: h9kx3 band decoder
Size: A4
Date: 2019-05-03
Rev: 1.0
KiCad E.D.A. kicad 4.0.6
Id: 1/1