MARK	REVISION	REASONABLE	DATE	SIGN
△1				
△2				

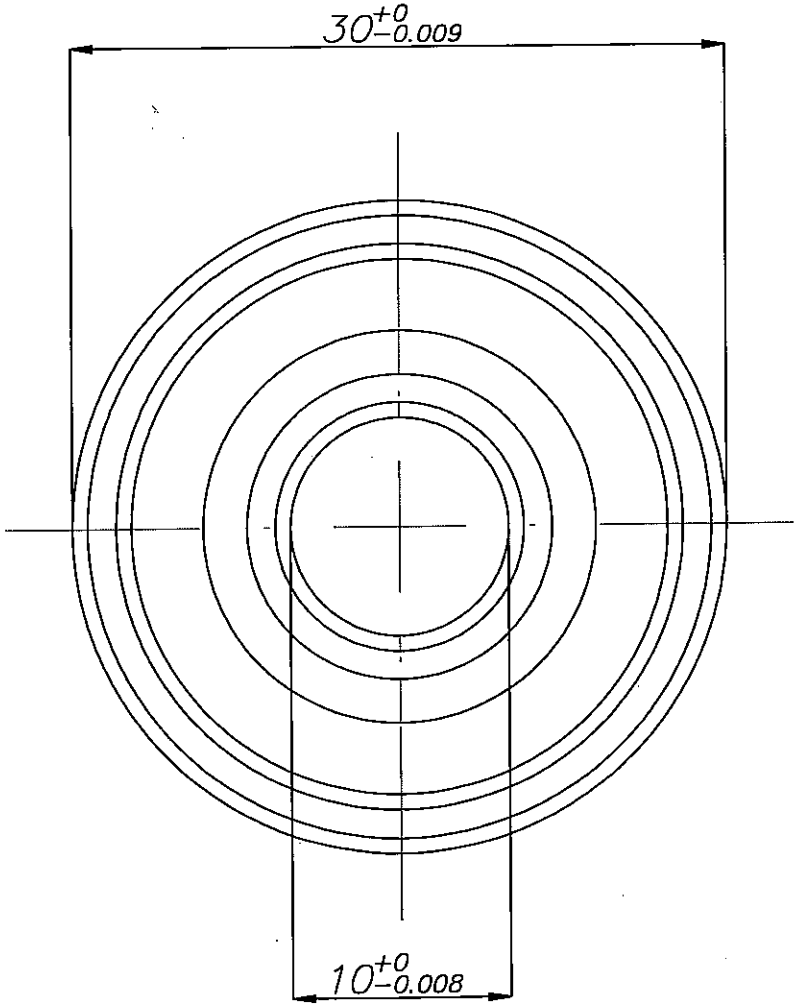

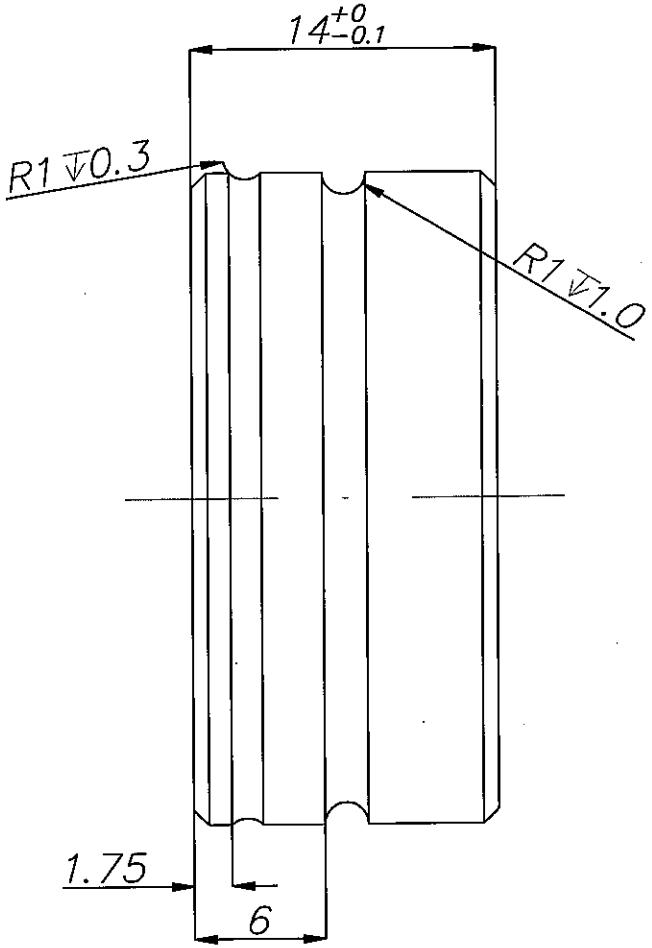

NO	DESCRIPTION	MATERIAL	Q/T	DIMENSION	HRC	REMARK
00	ROLLER BEARING	STD	–	–	–	–

DESIGNED BY	CHECKED BY	APPROVED BY		
ILHAM	JEFRY	RAGIL	CUSTOMER	PT. MEIHO
			PROJECT /MODEL	–
			NJO NO.	–
			PART NAME	–

UNITS: mm

THIRD ANGLE

TOLERANCES UNLESS OTHERWISE SPECIFIED

DIMENSION	MANUFACTURE						
0 – 30	± 0.1	+0.02 −0	+0 −0.02	+0.02 −0	−0.01 −0.03	+0.02 −0	+0.02 +0.05
31 – 120	± 0.2	+0.04 −0	+0 −0.04	+0.04 −0	−0.02 −0.06	+0.04 −0	+0.04 +0.10
120 – 400	± 0.35	+0.06 −0	+0 −0.06	+0.06 −0	−0.03 −0.08	+0.08 −0	+0.08 +0.15
400 –	± 0.5	+0.08 −0	+0 −0.08	+0.08 −0	−0.05 −0.10	+0.08 −0	+0.08 +0.20

Mark HOLE/X,Y,Z ±0.01 ⊕ +0.05/−0.02 ⊕ +0.05/−0.01 ⊕

@File name

TOLERANCE UNITS: 0. ±0.2 0.00 ±0.02; 0.0 ±0.1 0.000 ±0.01

PT ASTRA DAIDO STELL INDONESIA

Daido Steel -Parts -Machining -Heat Treatment -TD Process

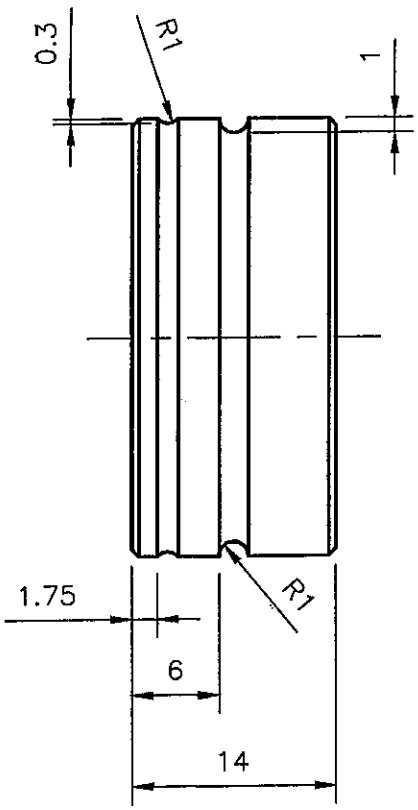
0.3
R1
1
R1
1.75
6
14

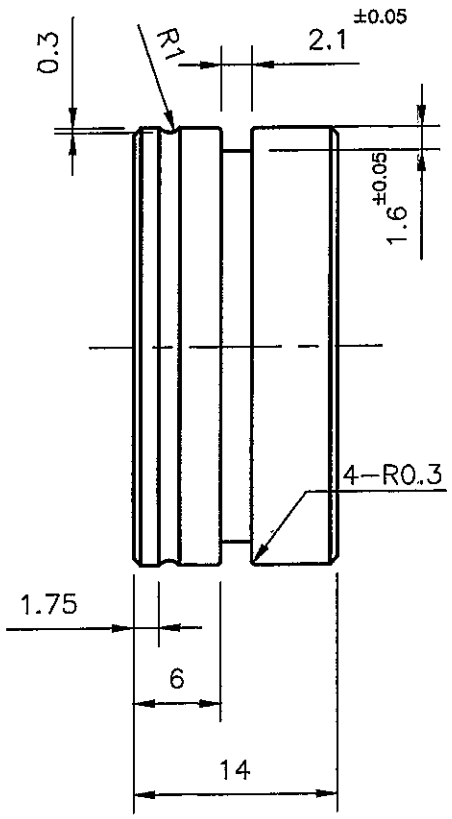
0.3
R1
2.1 ±0.05
1.6 ±0.05
4−R0.3
1.75
6
14

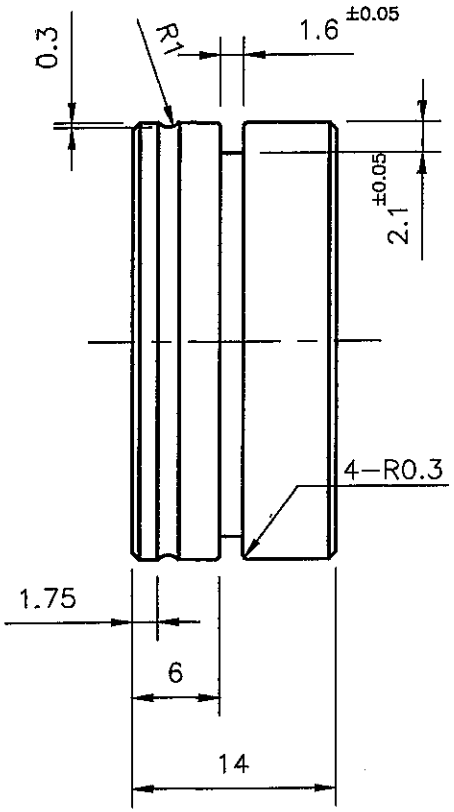
0.3
R1
1.6 ±0.05
2.1 ±0.05
4−R0.3
1.75
6
14