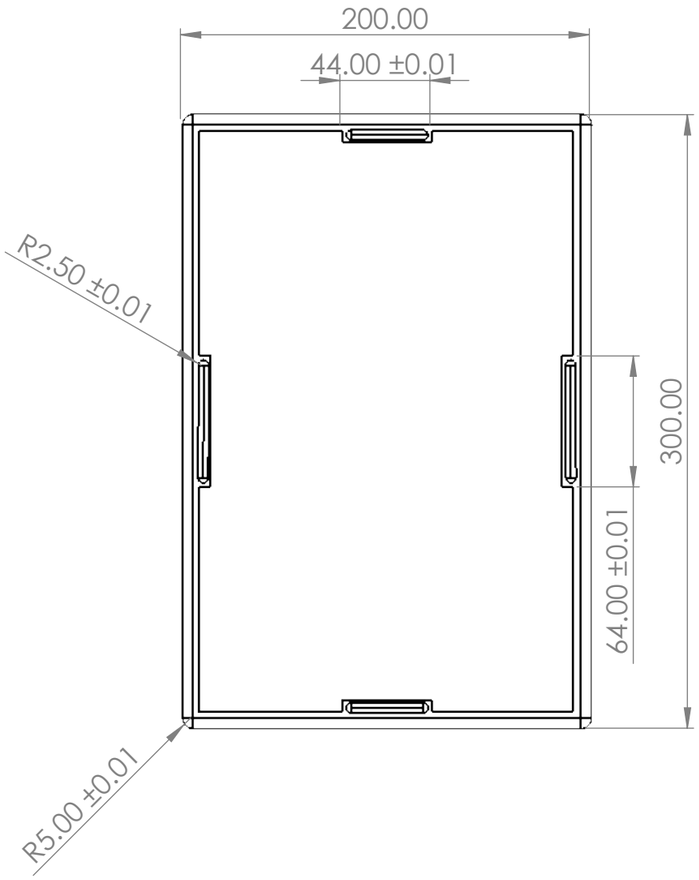

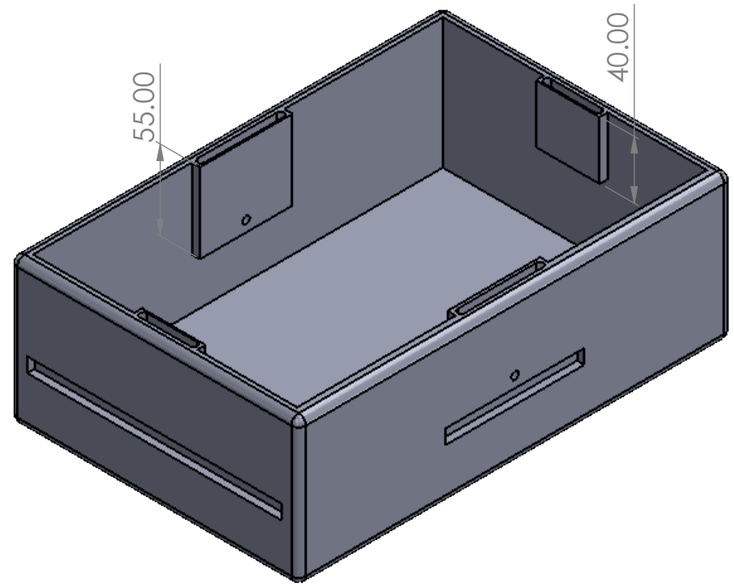

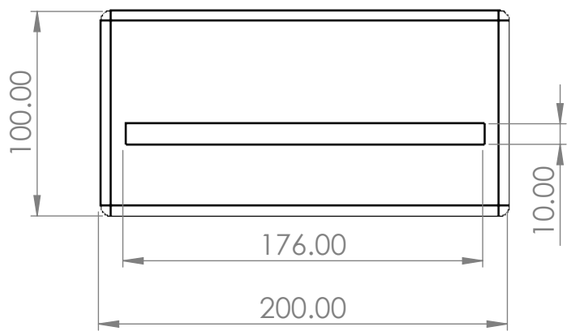

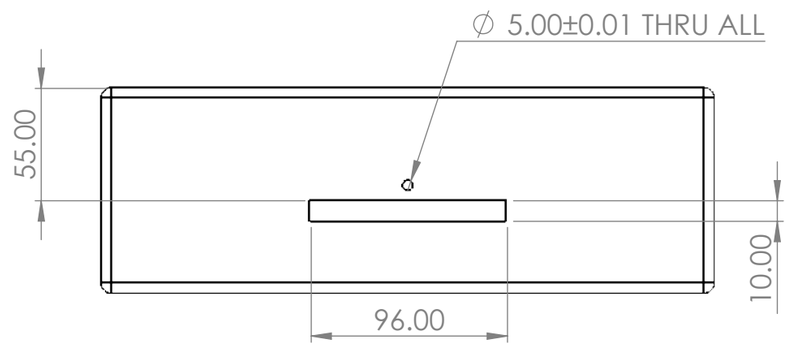

DIMENSIONS ARE IN MILLIMETERS & DEGREES

TOLERANCES: 180-9001

	NAME	SIGNATURE	DATE
DRAWN BY	LASISI ENIOLA MUHAMMAD	LMD	03/06/22
CHECKED BY	ASST. PROF. DR. QASIM ZEESHAN		07/06/22
SCALE: 1:3		MATERIAL: PLA	

EASTERN MEDITERRANEAN UNIVERSITY
MECHANICAL ENG. DEPT.

TITLE: BODY

PART NO. 1-1-1-1