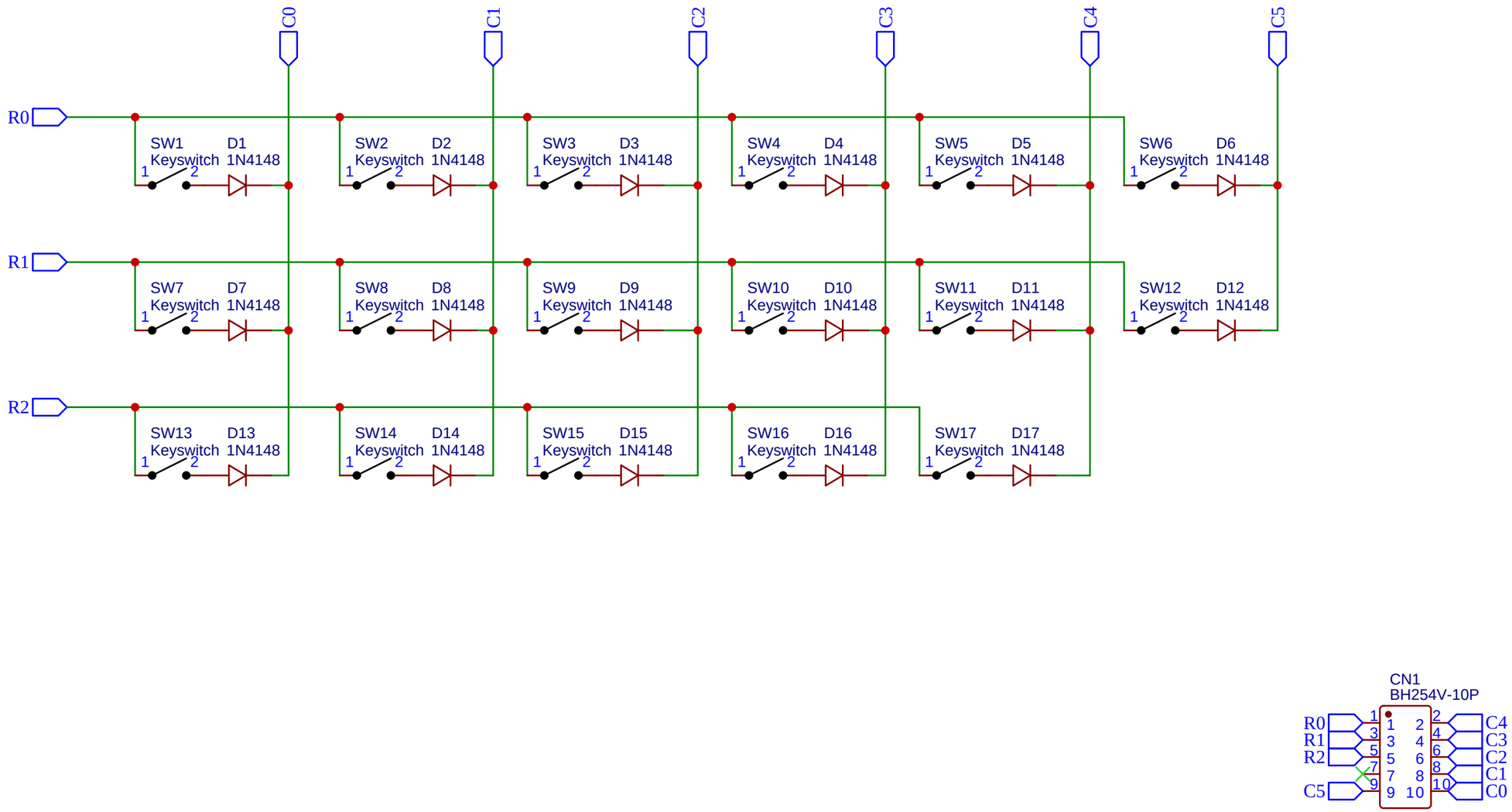

TITLE: Keypad		REV: 1.0
嘉立创EDA	Company: Civrays	Sheet: 1/1
	Date: 2023-02-13 Drawn By: srayner	