MITSUBISHI ELECTRIC
Changes for the Better

for a greener tomorrow

FX5U : Sequence Instructions

Training Department
Factory Automation Engineering Centre
Factory Automation & Industrial Division
Mitsubishi Electric India Private Limited
MEI-FAID-FATRAINING@asia.meap.com

MITSUBISHI ELECTRIC INDIA

COPY RIGHT : 2011 MITSUBISHI ELECTRIC INDIA PVT. LTD. ALL RIGHTS RESERVED

Contents

- Ladder Programming Language
- Sequence Instructions
  - Contact Instructions
  - Output Instruction (Without timer & Counter)
  - Timer Instructions
  - Counter Instructions

Ladder Diagram

- It is symbolic instruction set that is used to create a PLC program
- It is one of the five IEC standard programming languages
- It is composed of the rungs
- **Rung:** A ladder rung is a horizontal slice of a ladder program which contains a complete, single set of logic instructions which allow power (Virtual) to flow from the left power bar to the right
- Ladder diagram is very similar to the standard wiring diagram and therefore it is very convenient to use for the electricians and technicians

Ladder Diagram

Remember

- Instructions are working with the memory addresses and they are assigned to PLC input/output devices
- Status on input devices are stored into their corresponding memory addresses inside PLC during PLC Input scan only
- Instructions process the information stored into memory and updates output memory or device memory
- Field devices are updated during output scan only

Program Execution Order

The following Figure Shows the Program Execution Order.

Program Execution will start from Left to Right and Top to Bottom.

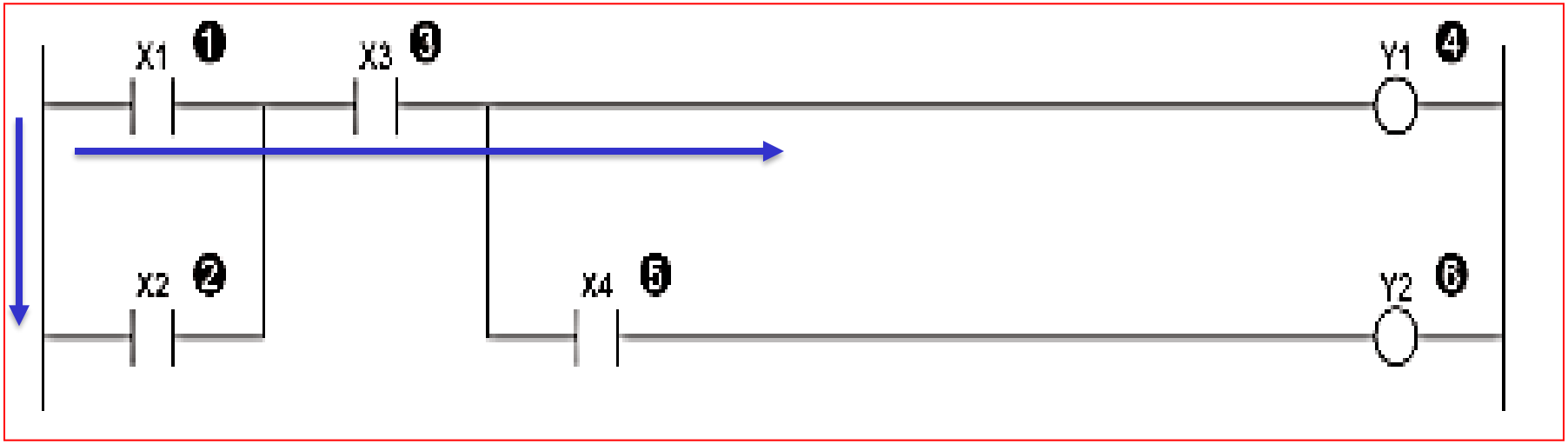

Contact Instructions

Symbol	Description	Argument
	NO instruction It is true when address has ‘1’	Bit Devices, Bit of Word Devices
	N/C instruction It is true when address has ‘0’	Bit Devices, Bit of Word Devices
	Leading Pulse True for one scan on up transition at address	Bit Devices, Bit of Word Devices
	Falling Pulse True for one scan on down transition at address	Bit Devices, Bit of Word Devices
	INV instruction It inverts the operation result up to this instruction	No Argument required
	MEP Instruction This instruction turns ON at the rising edge of the operation result up to the MEP instruction	No Argument required
	MEF Instruction This instruction turns ON at the falling edge of the operation result up to the MEF instruction	No Argument required

Contact Instruction

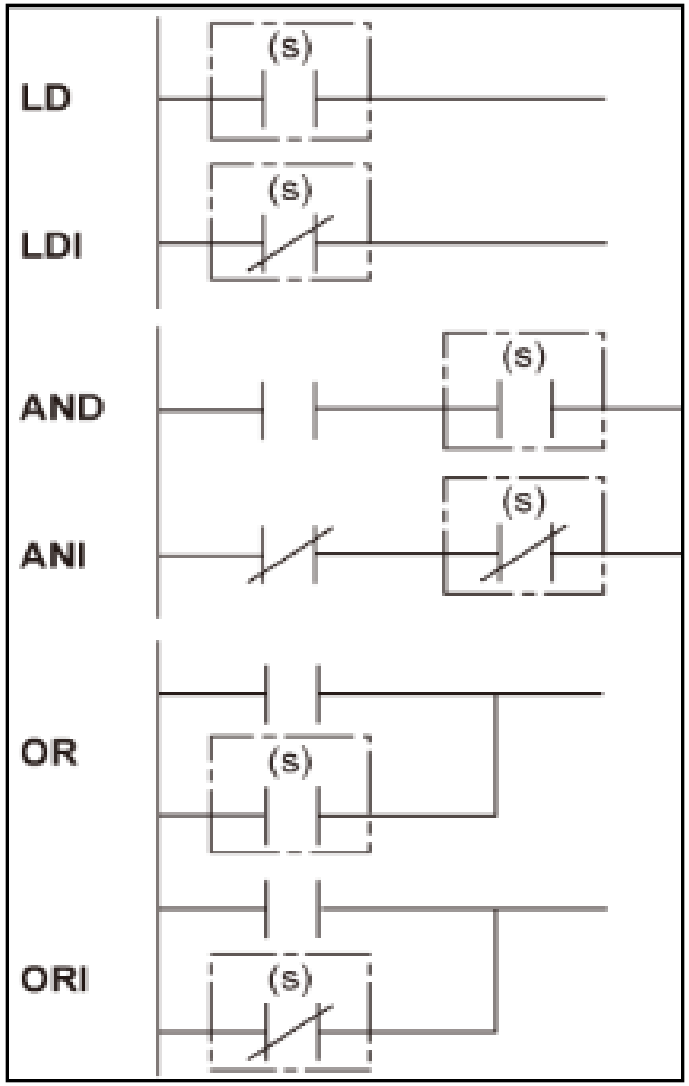

Operation Start, Series & Parallel Connection

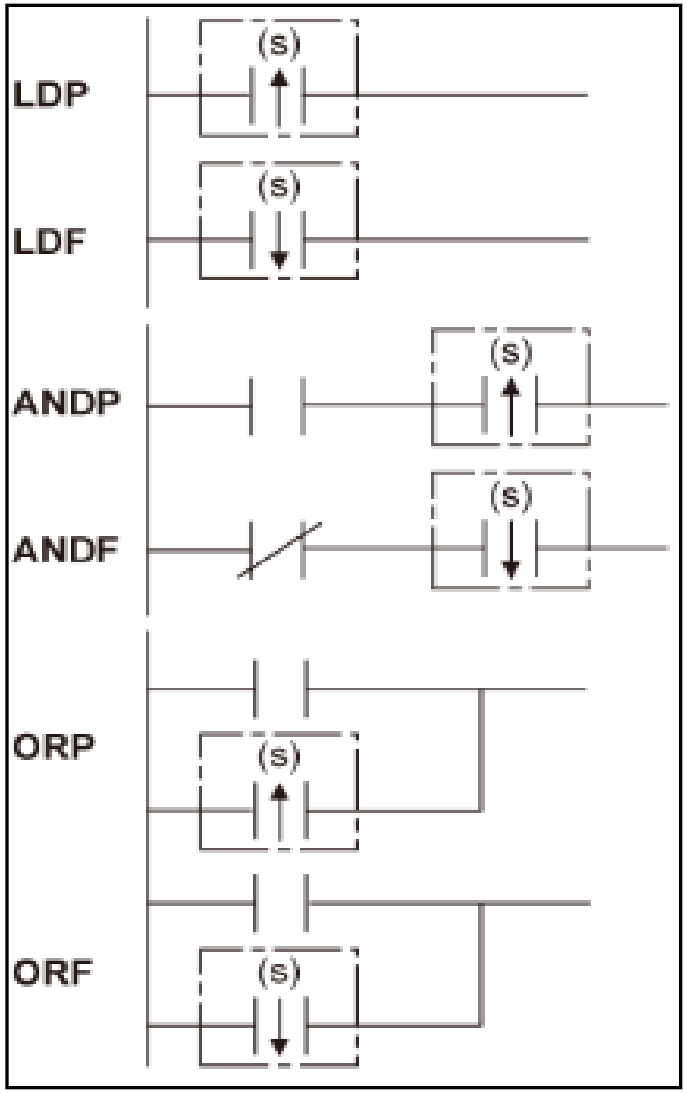

Pulse Operation Start, Series & parallel Connection

Output Instructions

Symbol	Description	Device
(d)	OUT D instruction Output as per the input logic	Bit Devices, Bit of Word Devices, Not
SET D	Set D when input is true	Bit Devices, Bit of Word Devices, Not T, ST or C
RST D	Reset D when input is true	Bit Devices, Bit of Word or Word Device
FF D	Toggle D when input transits from false to true	Bit Devices, Bit of Word Devices, Not T, ST or C
ALT(P) D	Toggle D when input transits from false to true	Bit Devices, Bit of Word Devices, Not T, ST or C
PLS D	Generates Pulse of one scan on Leading edge of input	Bit Devices, Bit of Word Devices, Not T, ST or C
PLF D	Generates Pulse of one scan on Trailing edge of input	Bit Devices, Bit of Word Devices, Not T, ST or C

Example

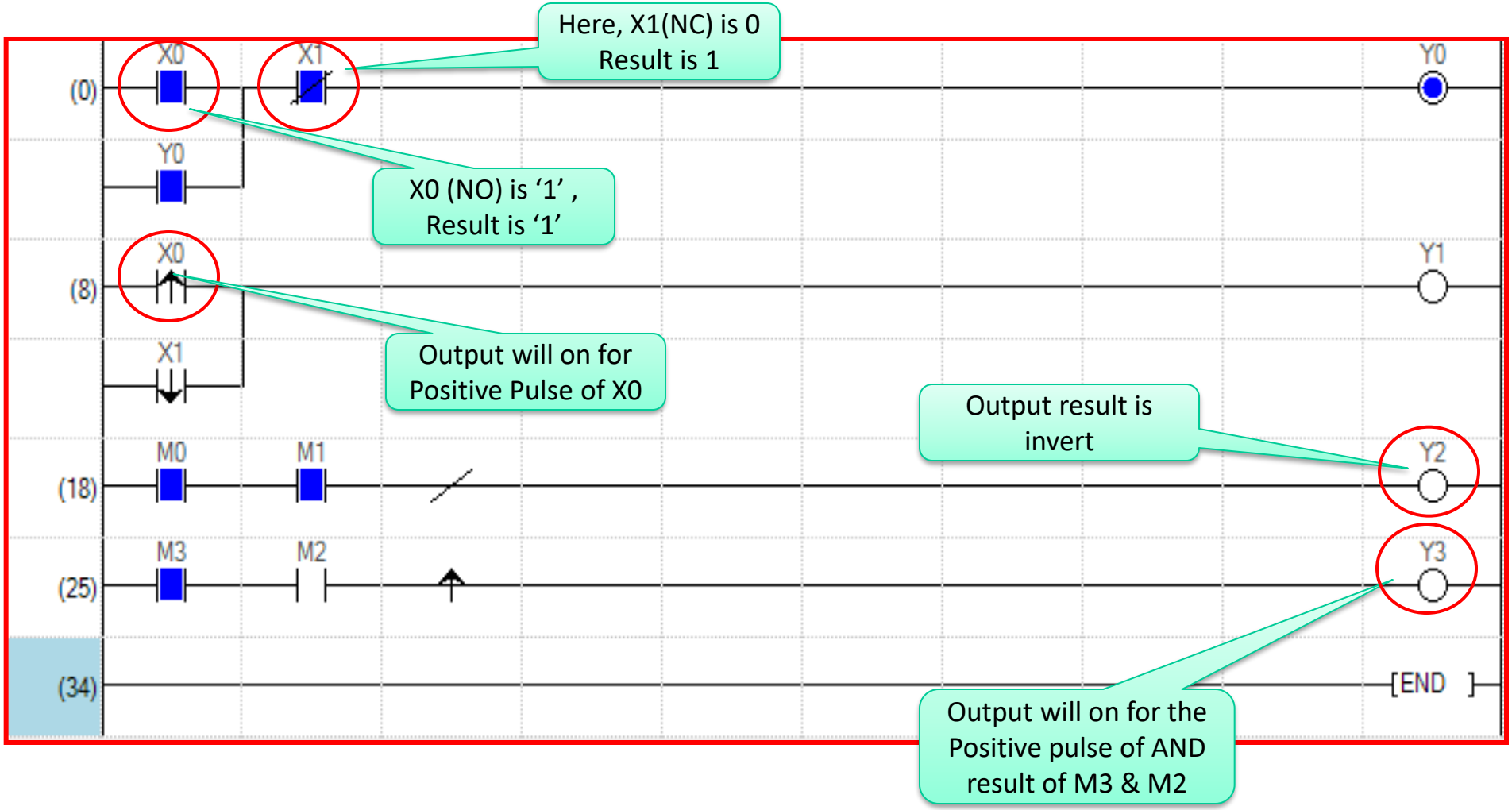
Here, X1(NC) is 0
Result is 1
X0 (NO) is '1' ,
Result is '1'
Output will on for
Positive Pulse of X0
Output result is
invert
Output will on for the
Positive pulse of AND
result of M3 & M2
(0)
X0
X1
Y0
Y0
(8)
X0
X1
Y1
(18)
M0
M1
Y2
(25)
M3
M2
Y3
(34)
[END]

Example

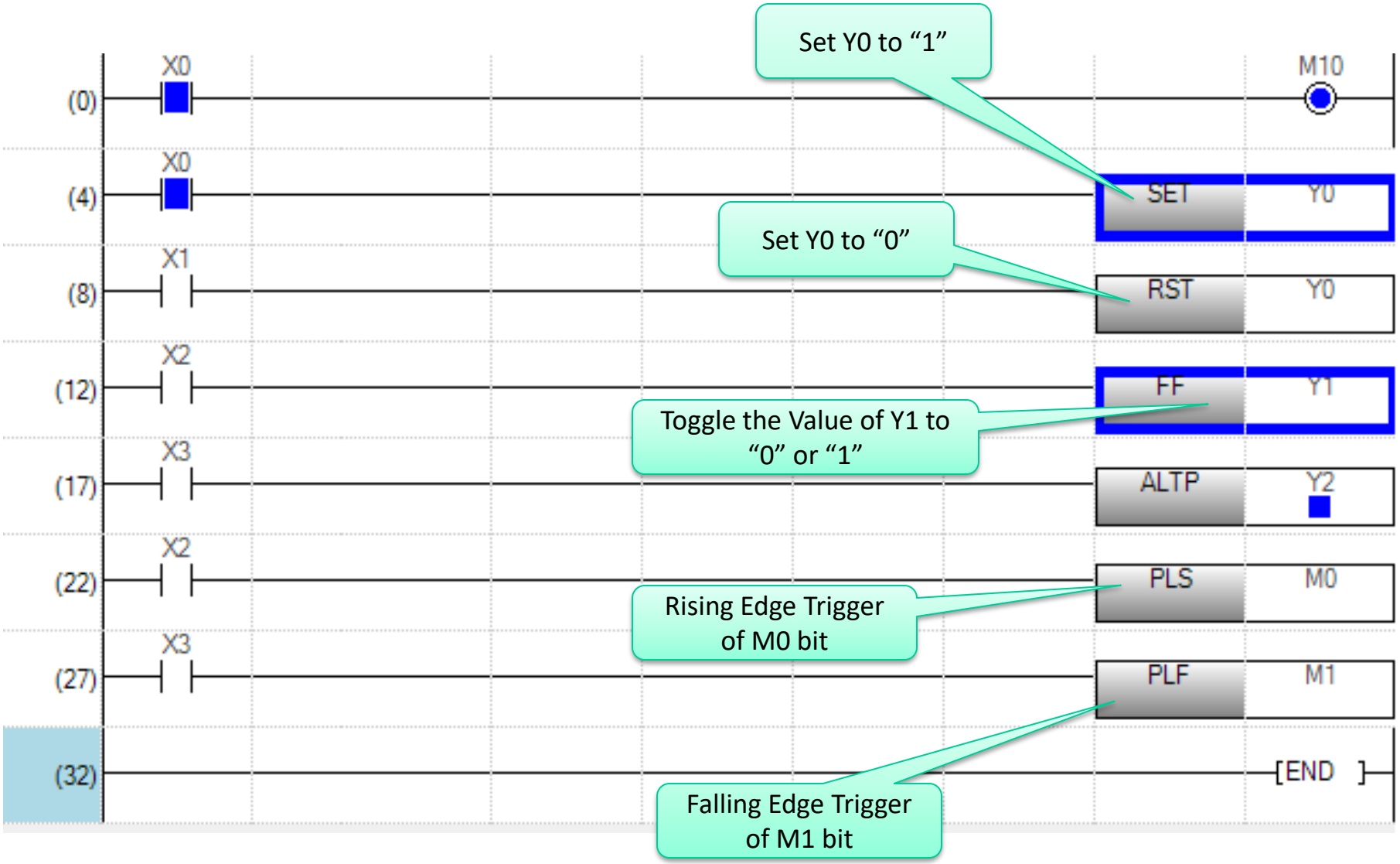
Set Y0 to “1”
Set Y0 to “0”
Toggle the Value of Y1 to “0” or “1”
Rising Edge Trigger of M0 bit
Falling Edge Trigger of M1 bit
(0) X0 M10
(4) X0 SET Y0
(8) X1 RST Y0
(12) X2 FF Y1
(17) X3 ALTP Y2
(22) X2 PLS M0
(27) X3 PLF M1
(32) [END]

Exercise#1

- Pushbutton (X0) and Stop Pushbutton (X1), write logic to start Lamp (Y0). Both the pushbuttons are wired in NO type. Do not use SET and RST instructions. (Hint: Holding ON Contact)

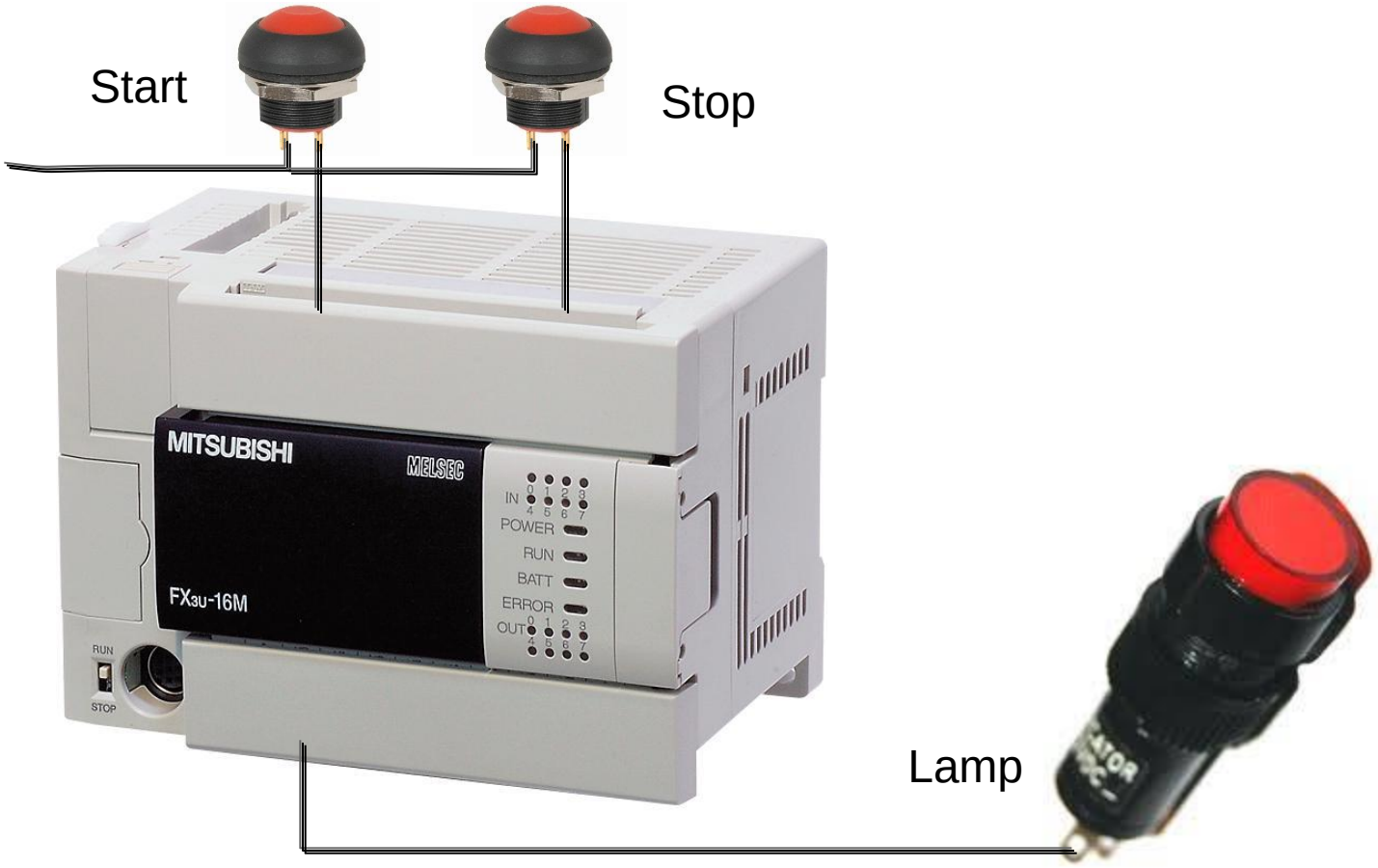

Exercise#2

- **Priority determination:**

  Three teams will press a switch in front of them to fight to be the first to answer a question. The buzzer will sound after any one of the team touches the switch. Light indicator of the team who touches first will light. The buzzer is reset only by the host switch.

- **I/O assignment**:

Inputs	Outputs
X0 PB1	Y0 Team A Light
X1 PB2	Y1 Team B Light
X2 PB3	Y2 Team C Light
X3 RESET	Y3 Buzzer

Exercise#3

Develop a Logic to Control Forward & Reverse Rotation of Induction Motor.

Condition:

When Start button is Pressed Power Contactor should ON. when Forward button is Pressed motor should move in Forward Direction & by pressing reverse button motor should rotate in reverse by stopping forward command. Motor should Stop after pressing Stop button.

- **I/O assignment**:

Inputs	Outputs
– X0 Start	Y0 Power Contactor
– X1 Stop (NC)	Y1 Motor Forward Command
– X2 Forward	Y2 Motor Reverse Command
– X3 Reverse	

Timers & Counters

Timers

It is output coil instruction

- Basically two type of timers
  - Non Retentive
  - Retentive
- Based on time base
  - Low speed (100 ms)
  - High speed (10 ms / 1 ms)
- Need to know
  - Preset : Constant, Register
  - Timer base : Low or High, configurable through PLC parameters
  - Accumulator : Accessed by address of Timer, current status of timer
  - Done bit : Contact, accessed by address of Timer

Timer Terminology

- Timer function is programmed using COIL instruction.
- Timer contact bit is accessed using Timer No.(e.g. T0 bit)
- Timer Accumulator is also accessed using Timer No. (e.g. T0 Word)
- Preset can be a variable if register is used.
- Timer is Enable with an Input ON and Timer contact bit turns ON when Preset Value is reached. Timer will automatically reset with Input turns OFF.

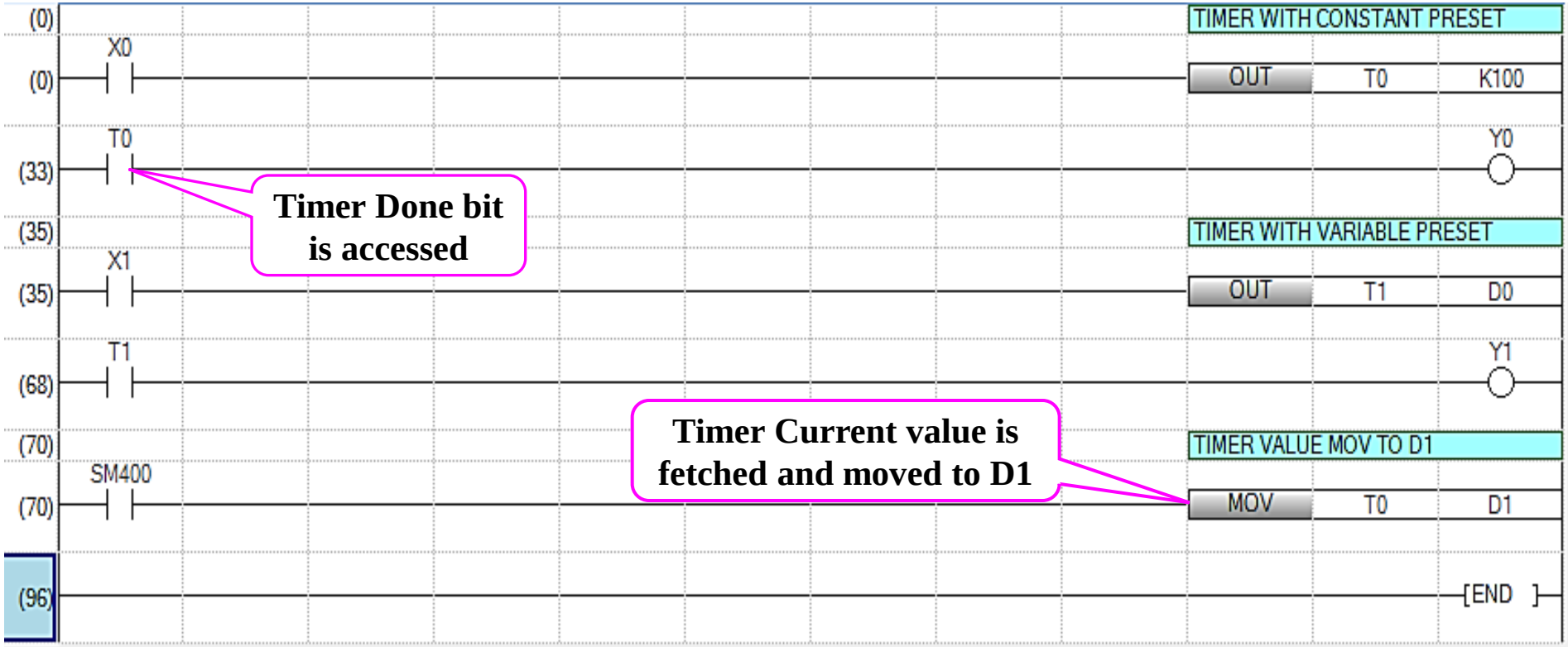

Retentive Timers

- Retentive Timers are denoted as ST in coil instruction.
- Retentive timer retains the Accumulator Value even if input turns OFF. So the timer should be reset by using RST instruction.
- **Note:** Before using Retentive Timers in Program, device Setting must be done as shown in previous slides.

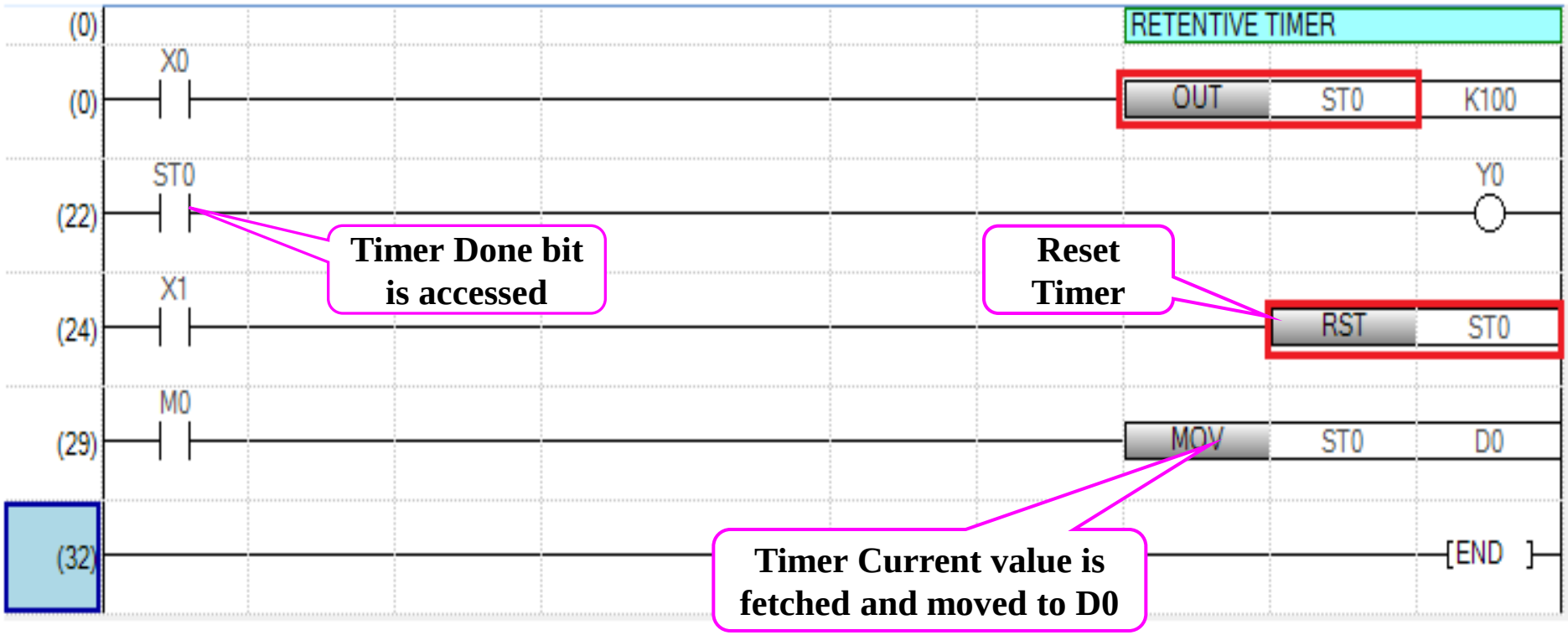

High speed Timers

- High Speed Timers are Configured as OUTH instead of OUT.
- Normal timer and retentive timers can be used as High speed Timers.
- There are two instructions for High Speed Timer
- 1. OUTH T# / ST# : For time base 10 ms (0.01 to 327.67)
- 2. OUTHS T# / ST# : For Time base 1 ms (0.001 to 32.767)

Special Function Timer (STMR)

- This instruction uses the four devices from the device specified by (d) to perform four types of timer output.

STMR	(s1)	(s2)	(d)

Operand	Description	Range	Data type
(s1)	Used timer number (operates as a 100 ms timer)	—	Device name
(s2)	Timer set value	1 to 32767	16-bit signed binary
(d)	Start bit number to be output	—	Bit

Operand: (d)	
Device	Description
+0	Offdelaytimer output Turns on at the rising edge ofthe command ofthe STMR instruction and turns off when the time specified by (s2) elapses after the falling edge.
+1	One-shot timer output after turning off Turns on at the falling edge ofthe command ofthe STMR instruction and turns off when the time specified by (s2) elapses.
+2	One-shot timer output after turning on Turns on at the rising edge ofthe command ofthe STMR instruction and turns off when the command ofthe STMR instruction is turned off or when the time specified by (s2) elapses.
+3	On delay timer + Off delay timer output: Turns on at the falling edge ofthe timer coil and turns off when the time specified by (s2) elapsed after the falling edge ofthe command of the STMR instruction.

Special Function Timer (STMR)

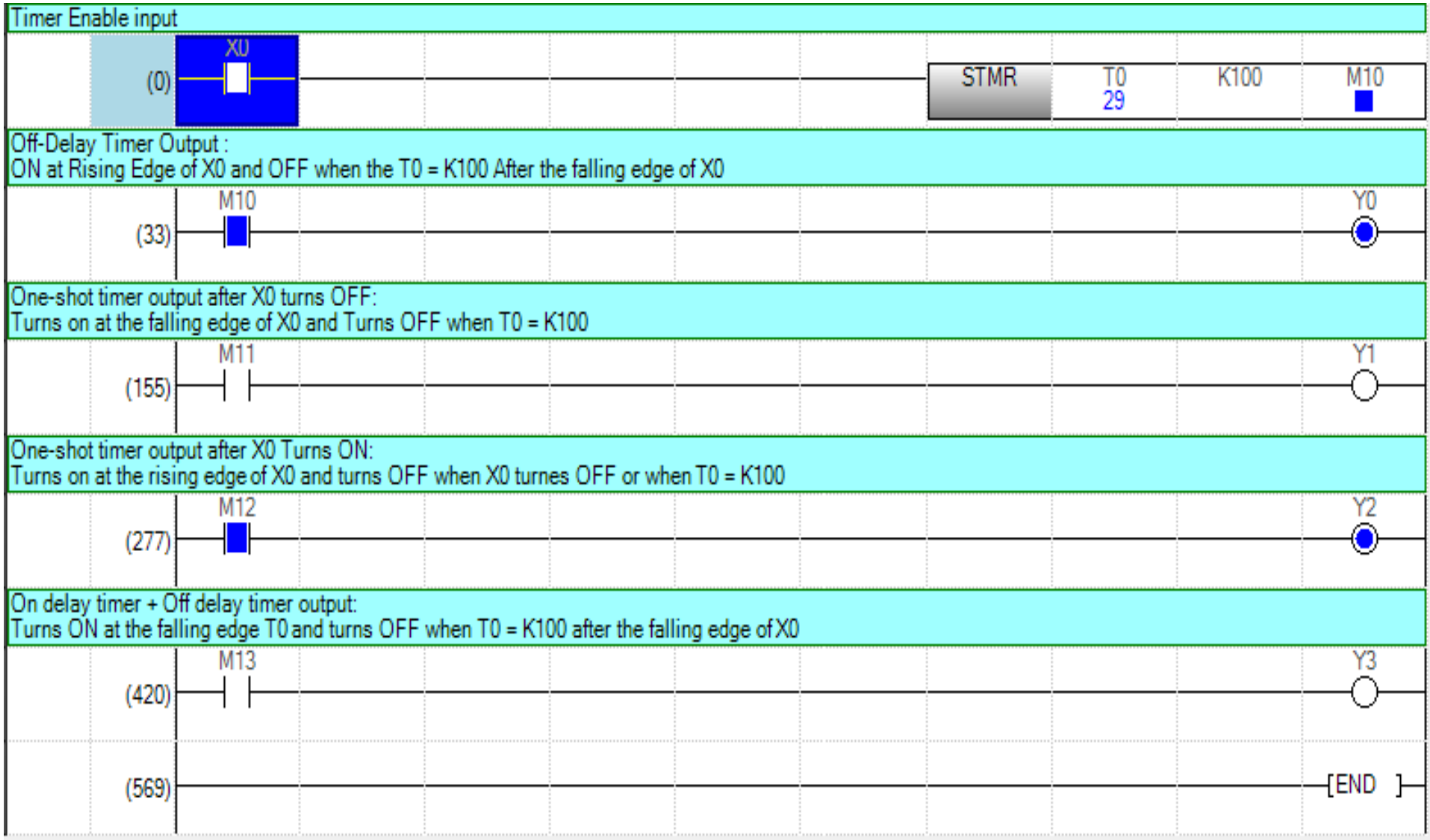

Exercise #4

- There are three mixing devices on a processing line: A, B, and C.
- After process begins,
  1. Mixer A is to start after 10 seconds elapse.
  2. Mixer B is to start 5.5 second after A.
  3. Mixer C is to start 7.55 second after B.
- All then remain on until a Master Enable switch is turned off.

- **I/O assignment**:

Inputs	**Outputs**
X0 Process Start	Y0 Mixer A
X1 Process Stop	Y1 Mixer B
	Y2 Mixer C

Exercise#5

Off-Delay Circuit.

- A motor and its lubrication pump motor are both turning on simultaneously. After the main motor is switched off, the lubrication pump remains on for a time corresponding to coast-down time (10 Seconds)

I/O assignment:

Inputs	Outputs
X0 Motor Start	Y0 Motor
X1 Motor Stop	Y1 Pump

Counter Terminology

- Counter function is programmed using COIL instruction
- Counter contact bit is accessed using Counter No. (e.g. C0)
- Counter Accumulator (current value) is also accessed using Counter No.(e.g. C0)
- Preset can be a variable if register is used.
- Counter must be Reset by a separate input.

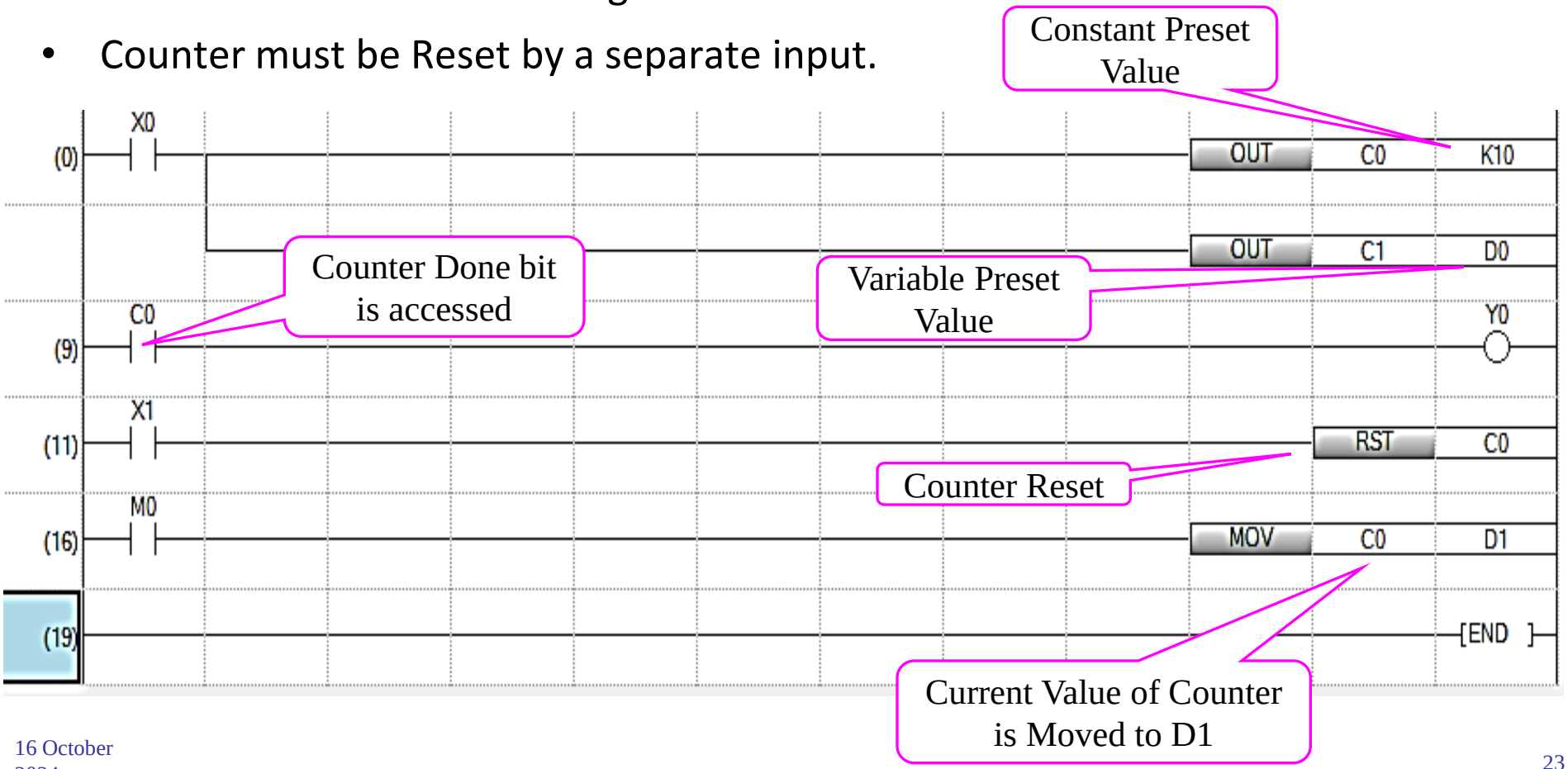

Long Counter

- Long counter is a 32 bit counter.
- Long counter is configured as LC.
- Preset value can be constant or Variable.
- Current Value of Long Counter can be Moved by DMOV instruction.

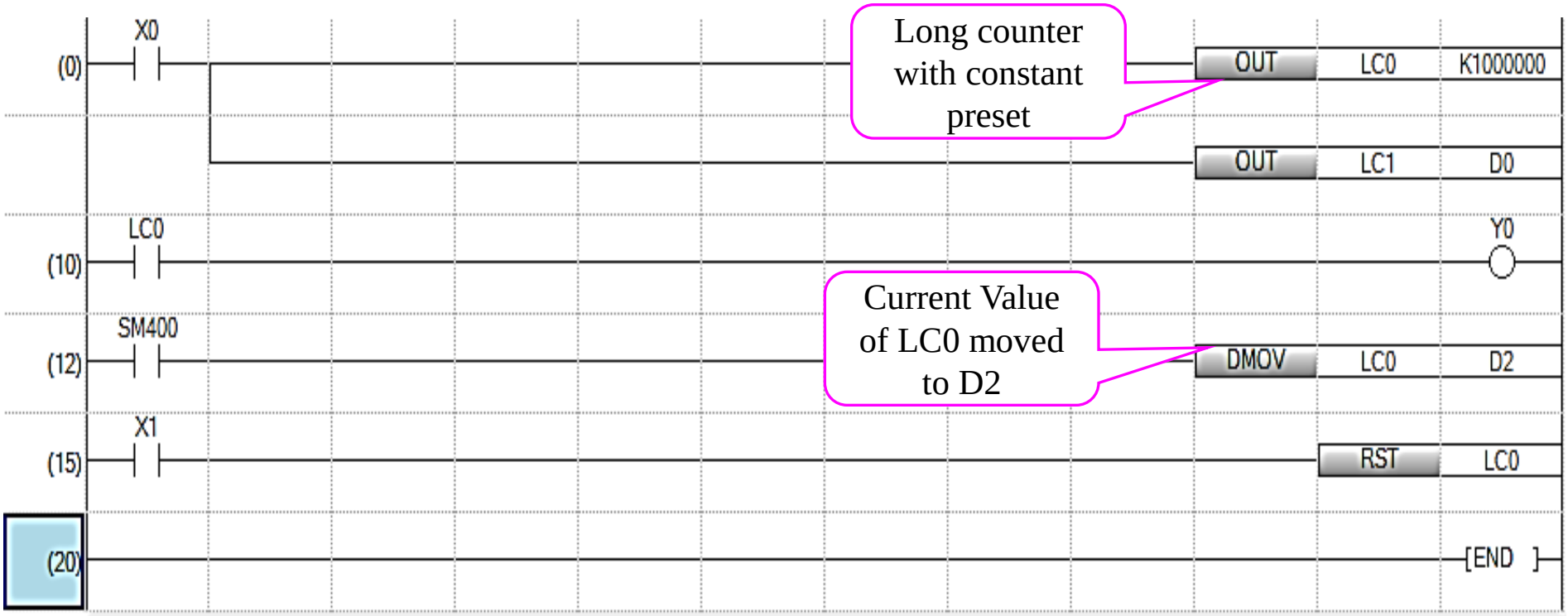

Exercise#6

- Count No. of object passes by the proximity switch (X0) and turn on the Horn (Y0) when it reaches to 20. Process start (X1) and Process Stop (X2), both pushbuttons are NO connected. If process start is not given then it must not count and horn must not turn on.
- **I/O assignment**:

Inputs	Outputs	Other PLC Devices
– X0 Proximity sensor	Y0 Horn	C0 Counter for 20 objects
– X1 Process Start		
– X2 Process Stop		

Exercise#7

- Paint spray is to run for 25 sec when 15 objects are in the chamber. Conveyor is to stop when paint spray is running. Use process start and stop switches to enable/disable the system.
- **I/O assignment**:
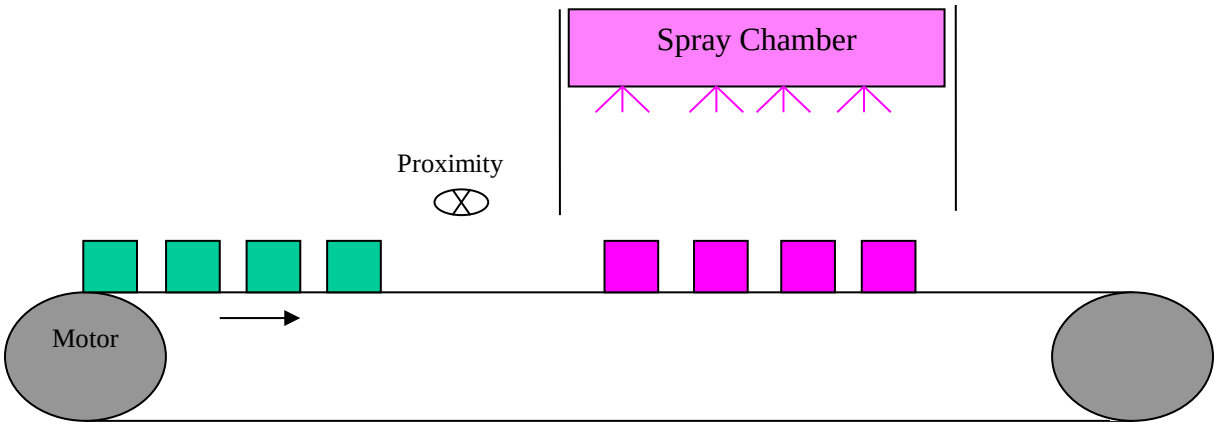
Inputs	Outputs	Other PLC Devices
– X0 Proximity sensor	Y0 Paint Spray	T0 Timer for 25 sec delay
– X1 Process Stop	Y1 Conveyor Motor	C0 Counter for 15 objects
– X2 Process Start