MITSUBISHI ELECTRIC
Changes for the Better

for a greener tomorrow

iQ-F Series
FX5U : Devices

Training Department
Factory Automation Engineering Centre
Factory Automation & Industrial Division
Mitsubishi Electric India Private Limited
MEI-FAID-FATRAINING@asia.meap.com

MITSUBISHI ELECTRIC INDIA

COPY RIGHT : 2011 MITSUBISHI ELECTRIC INDIA PVT. LTD. ALL RIGHTS RESERVED

Content

- User Device
- System Device
- Module Access Device
- Index Register
- File Registers
- Nesting
- Pointer
- Constant

User Device

- **Input X0 to X1777 (1024 Points) :**
- The PLC receives signals from external switches through input terminals. Inputs are designed to give commands and data from external devices, e.g. pushbuttons, select switches, etc., to the PLC.

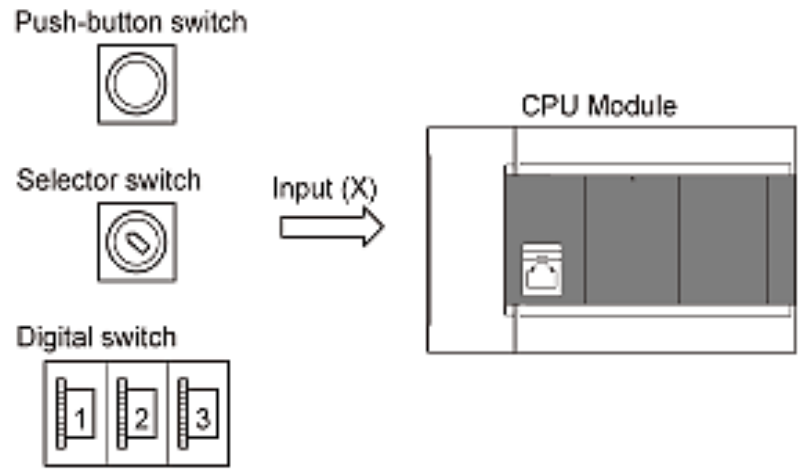

- **Output Y0 to Y1777 (1024 Points) :**
- The PLC outputs signals to external loads through output terminals. Contacts for external output (output devices such as relay contacts, Triac and transistors) of output relays are connected to output terminals inside the PLC. Outputs are used to provide the control results of a program from the PLC to external devices, e.g. solenoids, signal lamps.

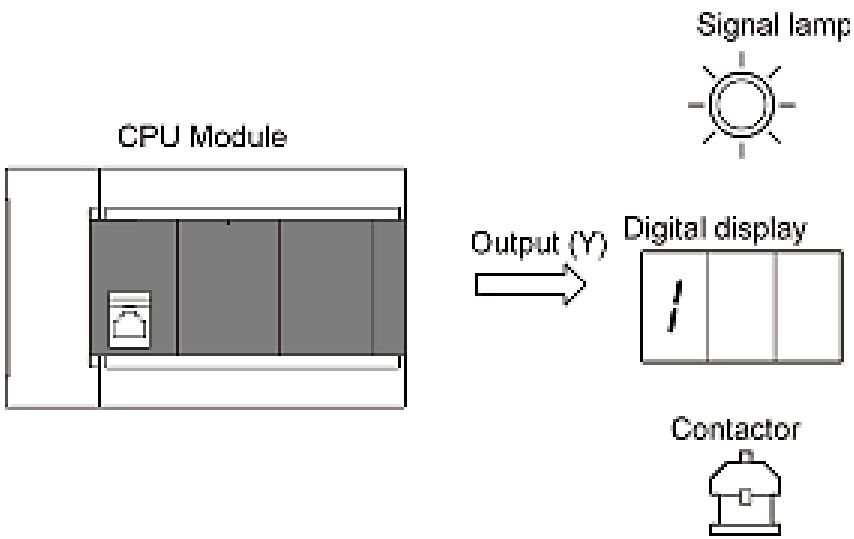

User Device

- **Internal Relay : M0 to M7679 (7680 Points)**
- There are many auxiliary relays inside the PLC. Coils of auxiliary relays are driven by contacts of various devices inside the PLC in the same way as output relays. However, external loads cannot be driven directly by these contacts. External loads should be driven by output relays.
- **Latch relay : L0 to L7679 (7680 Points)**
- Auxiliary relay that can latch (backup by battery) in the CPU module. Computation results (ON/OFF information) are latched even when performing the following operations.
  - CPU module power OFF → ON
  - Reset
- **Link relay : B0 to BFF (256 Points)**
- Relays intended to be used as a CPU side device when refreshing bit data between CPU module and network module.

User Device

- **Timers : T0 to T511 (512 Points) :** It starts timing when its coil turns on, and times out with its corresponding contact turned on when its current value reaches or exceeds its set value.

- **Retentive Timers : ST0 to ST15 (16 Points):** A retentive timer is designed to hold its current value if its coil turns off, and resumes timing from the held current value when the coil turns on again. It needs to be reset by a separate Logic using RST command.

- **Types of Timers**
  - low-speed (100ms)
  - high-speed (10ms/1ms)
  - low-speed retentive (100ms)
  - high-speed retentive (10ms/1ms)

User Device

- **Counter :**
- There is counter (C) that maintains the counter value in 16 bits and the long counter (LC) that maintains the counter value in 32 bits.
- Counter (C) and long counter (LC) are separate devices. You can set number of device points for each.

- **Counter : C0 to C255 (256 Points)**
- Uses 1 word as 1 point. The counting range is from 0 to 32767.

- **Long counter : LC0 to LC63 (64 Points)**
- Uses 2 words as 1 point. The counting range is from 0 to 4294967295.

User Devices

- **Data Registers : D0 to D7999 (8000 Points)**
- Data registers are devices for storing numeric data. Each data register stores 16-bit data (whose most significant bit specifies the positive or negative sign).
- Combined two data registers or file registers can store 32-bit numeric data (whose most significant bit specifies the positive or negative sign).
- **Link register : W0 to W1FF (512 Points)**
- Device intended to be used as a CPU side device when refreshing word data between CPU module and network module.
- **Link special register : SW0 to SW1FF (512 Points):**
- Word data such as communication and error detection status information of network modules is output to link special relays within the network. Link special registers (SW) are devices intended to be used as a refresh destination for link special registers within the network.

System Devices

System devices are devices for the system. Assignment/capacity are fixed and cannot be changed by the user.

- **Special relay (SM):**
- The PLC contains internal relays with fixed specifications, so it cannot be used in the program like a conventional internal relay. It can however be turned ON/OFF to control the CPU module as needed.

- **Special register (SD):**
- The PLC contains internal register with fixed specifications, so it cannot be used in the program like a conventional internal register. Data, however, can be written to control the CPU module as needed.

Index Registers

- Device used for indexing of devices are called as Index registers

Types of index registers

- There are 2 types: the index register (Z) and long index register (LZ)

1. **Index register : Z0 to Z19 (20 Points) :** Used for 16-bit index modification.

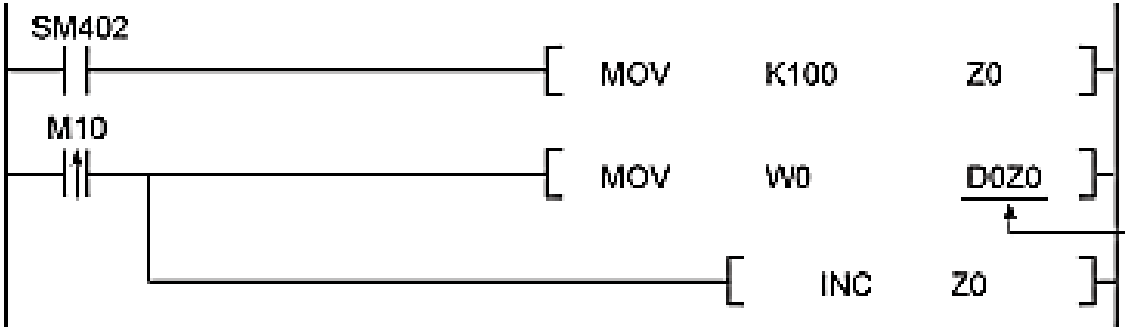

2. **Long index register : LZ0 to LZ1 (2 Points) :** Used for 32-bit index modification.

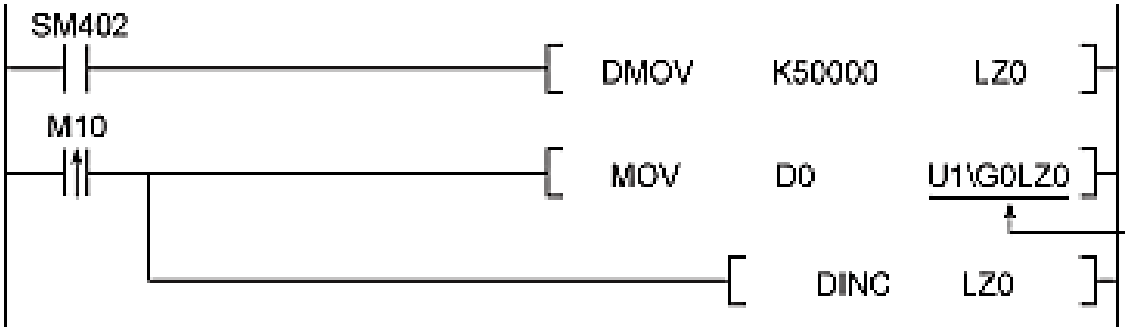

Pointers & Nesting

- **Pointers (P): 4096 Points**
- Device used by instructions such as jump instruction (CJ instruction) and subroutine program call instruction (CALL instruction, etc.).
- **Interrupt Pointer : I00 to I177 (178 Points)**
- Device used as label at top of interrupt program. Can be used by all running programs.
- The List of Interrupt is provided as below:

Interrupt	Interrupt pointer number	Description
Input interrupt	I0 to I15	interrupt pointer used for input interrupt of CPU module. Up to 8 points can be used.
High-speed comparison match interrupt	I16 to I23	Interrupt pointer used for high-speed comparison match interrupt of CPU module.
Interrupt by internal timer	I28 to I31	Interrupt pointer used for fixed cycle interrupt by internal timer.
Interrupt from module	I50 to I177	Interrupt pointer used for a module that has interrupt function.

- **Nesting : N0 to N14 (15 Points)**
- Device for programming operating conditions by nesting using master control instructions (MC/MCR instruction). Operation conditions are specified in ascending order (N0 to N14) from outside the nesting.

File Registers

- File Registers : R0 to R32767 (32768 Points)
- These are devices for extending data registers (D), and are backed up by the battery. While a memory cassette is mounted, the contents of data registers can be stored in file registers (R).

Module Access Device

- Device that allows you to directly access the **buffer memory** of intelligent function modules connected to the CPU module from the CPU module.
- **Un\G####:**
- It is Specified by U [module number of intelligent function modules] \ [buffer memory address]. (Example: U5\G11)
- Processing speed of reading/writing by module access device is faster than using FROM/TO instruction. (Example: MOV U2\G11 D0)

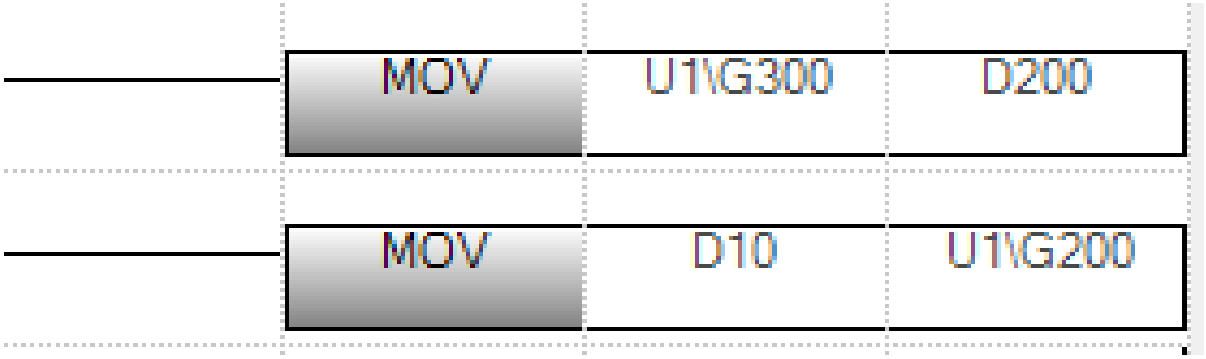

Constant

- **Decimal constant (K):**
- Device that specifies decimal data for the program. Specified by K. (Example: K1234)
- The specification range is determined by type of argument data of instruction using a decimal constant.

Argument data type of instruction		Specification range of decimal constants
Data size	Data type name	
16 bits	Word (signed)	K-32768 to K32767
	Word (unsigned)/Bit string (16-bit)	K0 to K65535
32 bits	Double word (signed)	K-2147483648 to K2147483647
	Double word (unsigned)/Bit string (32-bit)	K0 to K4294967295

- **Hexadecimal constant (H):**
- Device that specifies hexadecimal data for the program. Specified by H. (Example: H1234)
- When specifying BCD data, specify each digit of hexadecimal number in 0 to 9. The specification range is determined by type of argument data of instruction using a hexadecimal constant. If data size is 16 bits, H0 to HFFFF; if 32 bits, H0 to HFFFFFFFF.

Constant

- **Real constant (E):**
- Device that specifies real numbers for the program. Specified by E. (Example: E1.234)
- Real numbers can be specified by the following expressions.
- Normal expression: Specify a numeric value as it is. (Example: E10.2345 in the case of 10.2345)
- Scientific notation: Specify a numeric value in the format "numeric value" $\times 10^{n}$. (Example: E1.234+3 in the case of 1234. "+3" represents "10^{3}".)
- **Character string constant (“ ”):**
- Device that specifies character string. Shift JIS code character strings can be used. Character strings end with NULL character (00H).
- It is Specified by “string”. (Example : “ABCD”)

Device List

Division	Type	Device name	Symbol	Notation
User device	Bit	Input	X	Octal
	Bit	Output	Y	Octal
	Bit	Internal relay	M	Decimal
	Bit	Latch relay	L	Decimal
	Bit	Link relay	B	Hexadecimal number
	Bit	Annunciator	F	Decimal
	Bit	Link special relay	SB	Hexadecimal number
	Bit	Step relay	S	Decimal
	Bit/word	Timer	T (Contact: TS, Coil: TC, Current value: TN)	Decimal
	Bit/word	Retentive timer	ST (Contact: STS, Coil: STC, Current value: STN)	Decimal
	Bit/word	Counter	C (Contact: CS, Coil: CC, Current value: CN)	Decimal
	Bit/Double word	Long counter	LC (Contact: LCS, Coil: LCC, Current value: LCN)	Decimal
	Word	Data register	D	Decimal
	Word	Link register	W	Hexadecimal number
	Word	Link special register	SW	Hexadecimal number
System device	Bit	Special relay	SM	Decimal
	Word	Special register	SD	Decimal
Module access device (U □ \G □)	Word	Module access device	G	Decimal
Index register	Word	Index register	Z	Decimal
	Double word	Long index register	LZ	Decimal
File registers	Word	File registers	R	Decimal
Nesting	—	Nesting	N	Decimal
Pointer	—	Pointer	P	Decimal
	—	Interrupt pointer	I	Decimal
Constant	—	Decimal constant	K	Decimal
	—	Hexadecimal constant	H	Hexadecimal number
	—	Real constant	E	—
	—	Character string constant	—	—

Special Relays for diagnosis

Diagnosis Information

No.	Name	Description	R/W
SM0	Latest self diagnostics error (including annunciator ON)	OFF: No error ON: Error	R
SM1	Latest self diagnostics error (not including annunciator On)	OFF: No self-diagnosis errors ON: Self-diagnosis error	R
SM50	Error reset	OFF → ON: Error reset request ON → OFF: Error reset completion	R/W
SM51	Battery low latch	OFF: Normal ON: Battery low	R
SM52	Battery low	OFF: Normal ON: Battery low	R
SM53	AC/DC DOWN	OFF: No AC/DC down detection ON: AC/DC down is detected	R
SM56	Instruction execution fault	OFF: Normal ON: Operation error	R
SM61	I/O module verify error	OFF: Normal ON: Error	R
SM62	Annunciator	OFF: Not detected ON: Detected	R
SM80	Detailed information 1: Flag in use	OFF: Not used ON: In use	R
SM112	Detailed information 2: Flag in use	OFF: Not used ON: In use	R

Special Relays for System Clock

No.	Name	Description	R/W
SM400	Always ON	ON OFF	R
SM401	Always OFF	ON OFF	R
SM402	After RUN, ON for one scan only	ON OFF 1 scan	R
SM403	After RUN, OFF for one scan only	ON OFF 1 scan	R
SM409	0.01 second clock	0.005 s 0.005 s	R
SM410	0.1 second clock	0.05 s 0.05 s	R
SM411	0.2 second clock	0.1 s 0.1 s	R
SM412	1 second clock	0.5 s 0.5 s	R
SM413	2 second clock	1 s 1 s	R
SM414	2n second clock	n s n s	R
SM415	2n ms clock	n (ms) n (ms)	R

Special Relays for FX compatible Area

No.	Name	Description	R/W
SM8000	RUN monitor NO contact	OFF: STOP ON: RUN	R
SM8001	RUN monitor NC contact	OFF: RUN ON: STOP	R
SM8002	Initial pulse NO contact	OFF: SM8002 turns off except during 1 scan at the time of RUN ON: SM8002 turns on during 1 scan at the time of RUN	R
SM8003	Initial pulse NC contact	OFF: SM8003 turns on during 1 scan at the time of RUN ON: SM8003 turns off except during 1 scan at the time of RUN	R
SM8004	Error occurrence	OFF: No error ON: Error	R
SM8005	Battery voltage low	OFF: Battery normal ON: Battery voltage low	R
SM8006	Battery error latch	OFF: Battery normal ON: Battery voltage low latch	R
SM8007	Momentary power failure	OFF: No momentary power failure ON: Momentary power failure detected	R
SM8008	Power failure detected	OFF: No momentary power failure ON: During momentary power failure	R
SM8011	10 msec clock pulse	ON and OFF in 10 ms cycles OFF: 5 ms ON: 5 ms	R
SM8012	100 msec clock pulse	ON and OFF in 100 ms cycles OFF: 50 ms ON: 50 ms	R
SM8013	1 sec clock pulse	ON and OFF in 1 sec cycles OFF: 500 ms ON: 500 ms	R
SM8014	1 min clock pulse	ON and OFF in 1 min cycles OFF: 30 s ON: 30 s	R

Special Registers for System Information

No.	Name	Description	R/W
SD200	Switch Status	This register stores the CPU switch status. 0: RUN 1: STOP	R
SD201	LED Status	This register stores the LED status. b0: STOP b4: RUN b5: PAUSE	R
SD203	CPU Status	This register stores the CPU Status. 0: RUN 2: STOP 3: PAUSE	R
SD210	Clock Data (Year)	This register stores the clock data (Year).	R/W
SD211	Clock Data (Month)	This register stores the clock data (Month).	R/W
SD212	Clock Data (Day)	This register stores the clock data (Day).	R/W
SD213	Clock Data (Hour)	This register stores the clock data (Hour).	R/W
SD214	Clock Data (Minute)	This register stores the clock data (Minute).	R/W
SD215	Clock Data (Second)	This register stores the clock data (Second).	R/W
SD216	Clock Data (Day Week)	This register stores the clock data (Day of the Week).	R/W
SD218	Time zone setting value	The time zone setting value specified in the parameter is stored in increments of minutes.	R

Special Registers for FX compatible area

No.	Name	R/W
SD8000	Watchdog timer	R/W
SD8001	PLC type and system version	R
SD8005	Battery voltage	R
SD8006	Low battery voltage	R/W
SD8007	Power failure count	R
SD8008	Power failure detection period	R/W
SD8010	Current scan time	R
SD8011	Minimum scan time	R
SD8012	Maximum scan time	R
SD8013	RTC: Seconds	R/W
SD8014	RTC: Minute data	R/W
SD8015	RTC: Hour data	R/W
SD8016	RTC: Day data	R/W
SD8017	RTC: Month data	R/W
SD8018	RTC: Year data	R/W
SD8019	RTC: Day of week data	R/W
SD8039	Constant scan duration	R/W

Device Setting

Navigation window ➡ [Parameter] ➡ [FX5UCPU] ➡ [CPU Parameter] ➡ "Memory/Device Setting" ➡ "Device/Label Memory Area Setting"

FX5UCPU CPU Parameter

Setting Item List

Input the Setting Item to Search

- Name Setting
- Operation Related Setting
- Interrupt Settings
- Service Processing Setting
- File Setting
- Memory/Device Setting
  - Device/Label Memory Area Set
  - Index Register Setting
  - Pointer Setting
  - Internal Buffer Capacity Setting
- RAS Setting
- Program Setting

Setting Item

Item	Symbol	Device Points	Device Range	Latch (1)	Latch (2)
Input	X	1024	0 to 1777		
Output	Y	1024	0 to 1777		
Internal Relay	M	7680	0 to 7679	Setting	No Setting
Link Relay	B	256	0 to FF	No Setting	No Setting
Link Special Rela	SB	512	0 to 1FF		
Annunciator	F	128	0 to 127	No Setting	No Setting
Step Relay	***S***	4096	0 to 4095	Setting	
Timer	T	512	0 to 511	No Setting	No Setting
Retentive Timer	ST	16	0 to 15	Setting	No Setting
Counter	C	256	0 to 255	Setting	No Setting
Long Counter	LC	64	0 to 63	Setting	No Setting
Data Register	D	8000	0 to 7999	Setting	No Setting
Latch Relay	L	7680	0 to 7679		
Area Capacity		12.0K Word		11.0K Word	
Total Device		11.2K Word		9.6K Word	
Total Word Device		10.2K Word		8.1K Word	
Total Bit Device		15.9K Bit		25.1K Bit	

Explanation

Set latch range used in step relay (S).

[Type] Bit Device, [Notation] DEC
[Size of 1 Point] 3 Bits