MITSUBISHI ELECTRIC
Changes for the Better

for a greener tomorrow

Analog control using FX5U

Training Department
Factory Automation Engineering Centre
Factory Automation & Industrial Division
Mitsubishi Electric India Private Limited
MEI-FAID-FATRAINING@asia.meap.com

MITSUBISHI ELECTRIC INDIA

COPY RIGHT : 2011 MITSUBISHI ELECTRIC INDIA PVT. LTD. ALL RIGHTS RESERVED

Content

- Analog Controls
- FX5U Supported Analog products
- Functioning of AD module
- Functioning of DA module
- Analog I/O Functions
- Parameter setting & Allocated Devices for the Analog Functions.
  1. CPU Built-in Analog I/O
  2. FX5-4AD-ADP
  3. FX5-4AD-PT-ADP
  4. FX5-4AD-TC-ADP
  5. FX5-4DA-ADP

Analog Control

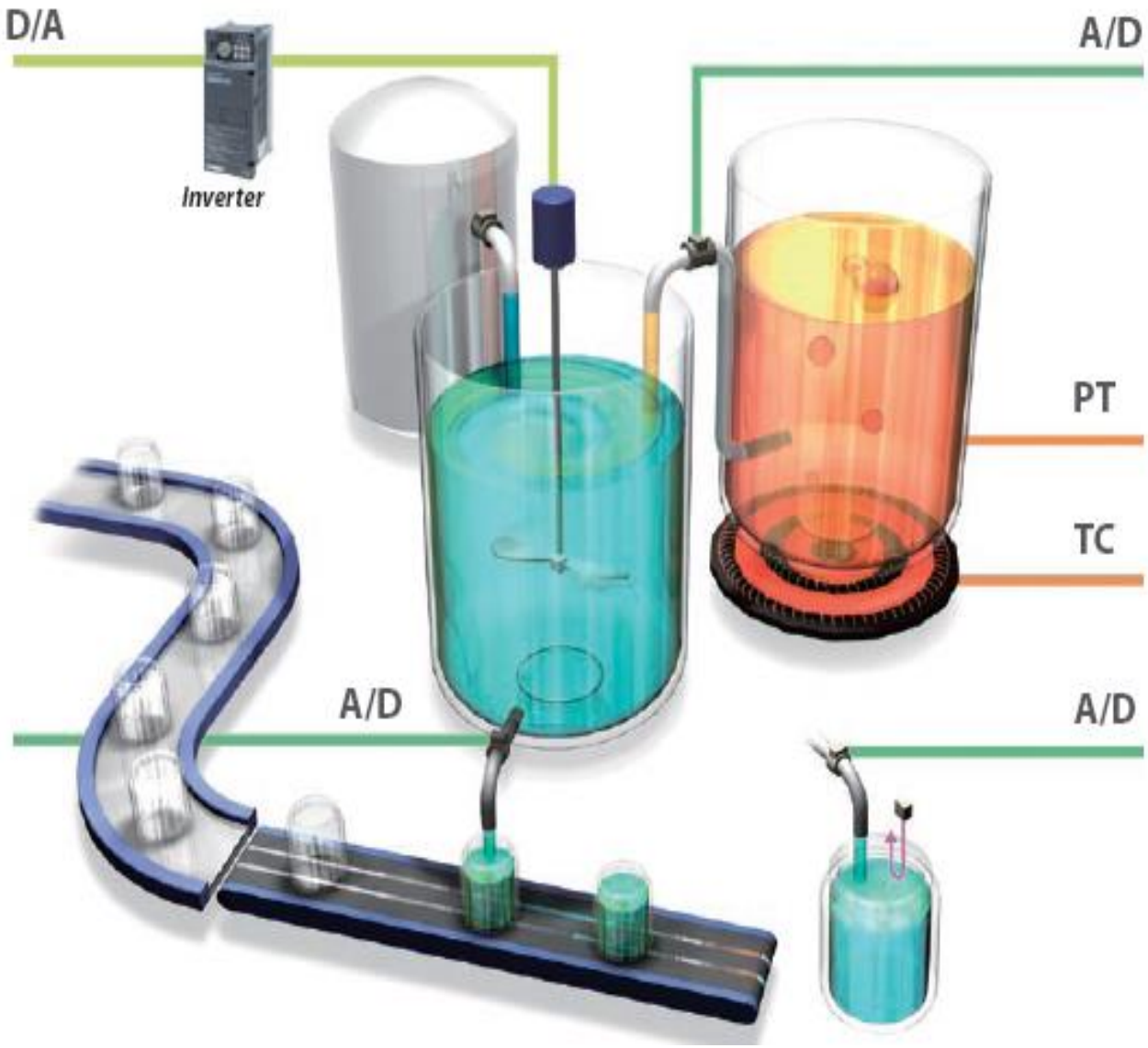

Analog Expansions

- Two types:
  - Special Adapter (Left hand side)
  - Special Function modules (Right Hand Side)

Supported Analog Products

- The FX5 CPU module has 2 points of built-in analog voltage input and 1 point of built-in analog voltage output.
- **Special Adaptors**

1. FX5-4AD-ADP (Analog Input)
2. FX5-4AD-TC-ADP (Temperature Input - Thermocouple)
3. FX5-4AD-PT-ADP (Temperature Input – RTD)
4. FX5-4DA-ADP (Analog Output)

- **Analog Modules**

1. FX5-8AD (Multiple Analog Input Module)
2. FX3U-4AD
3. FX3U-4DA

Functioning of AD module

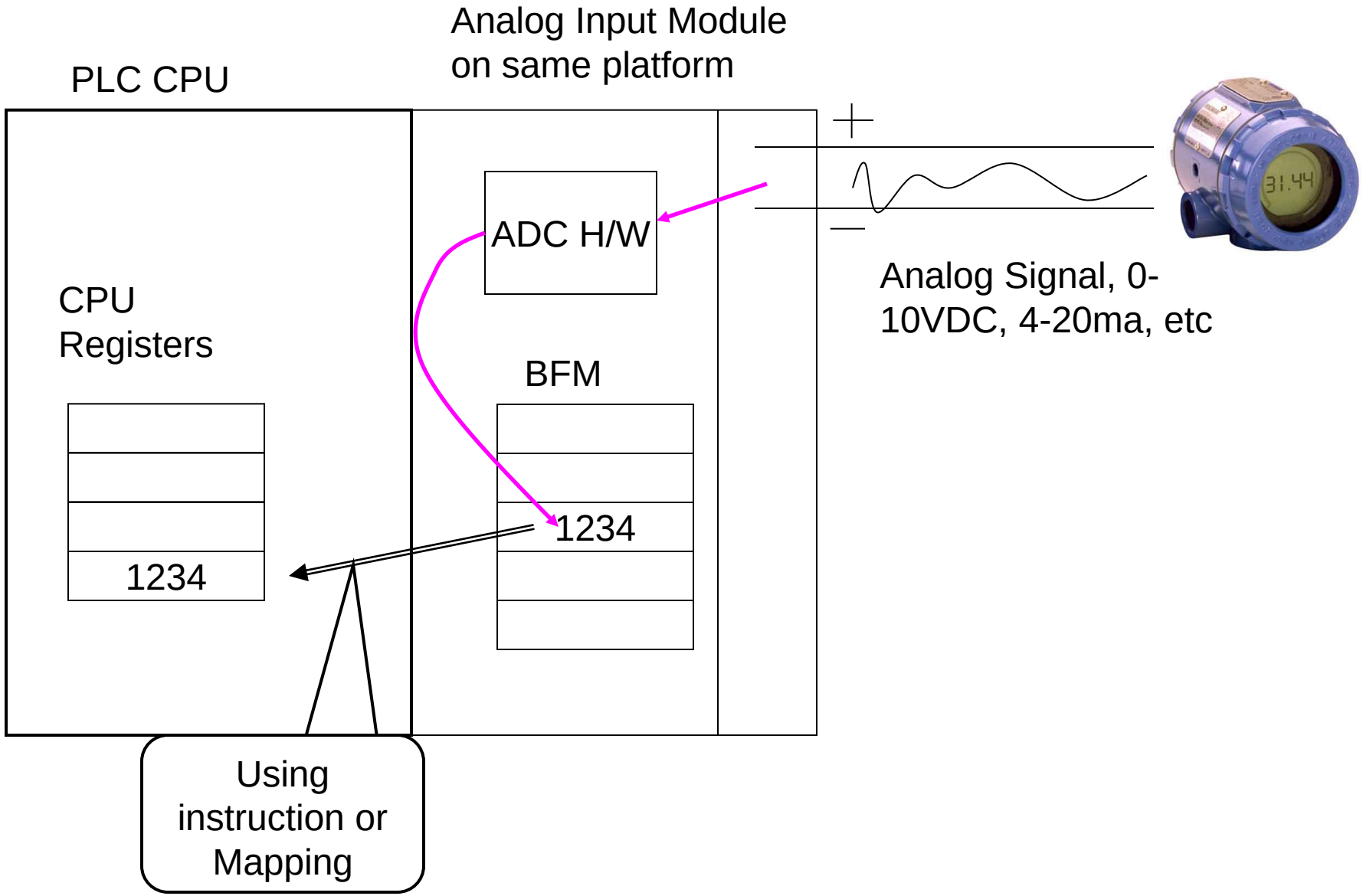

Functioning of DA module

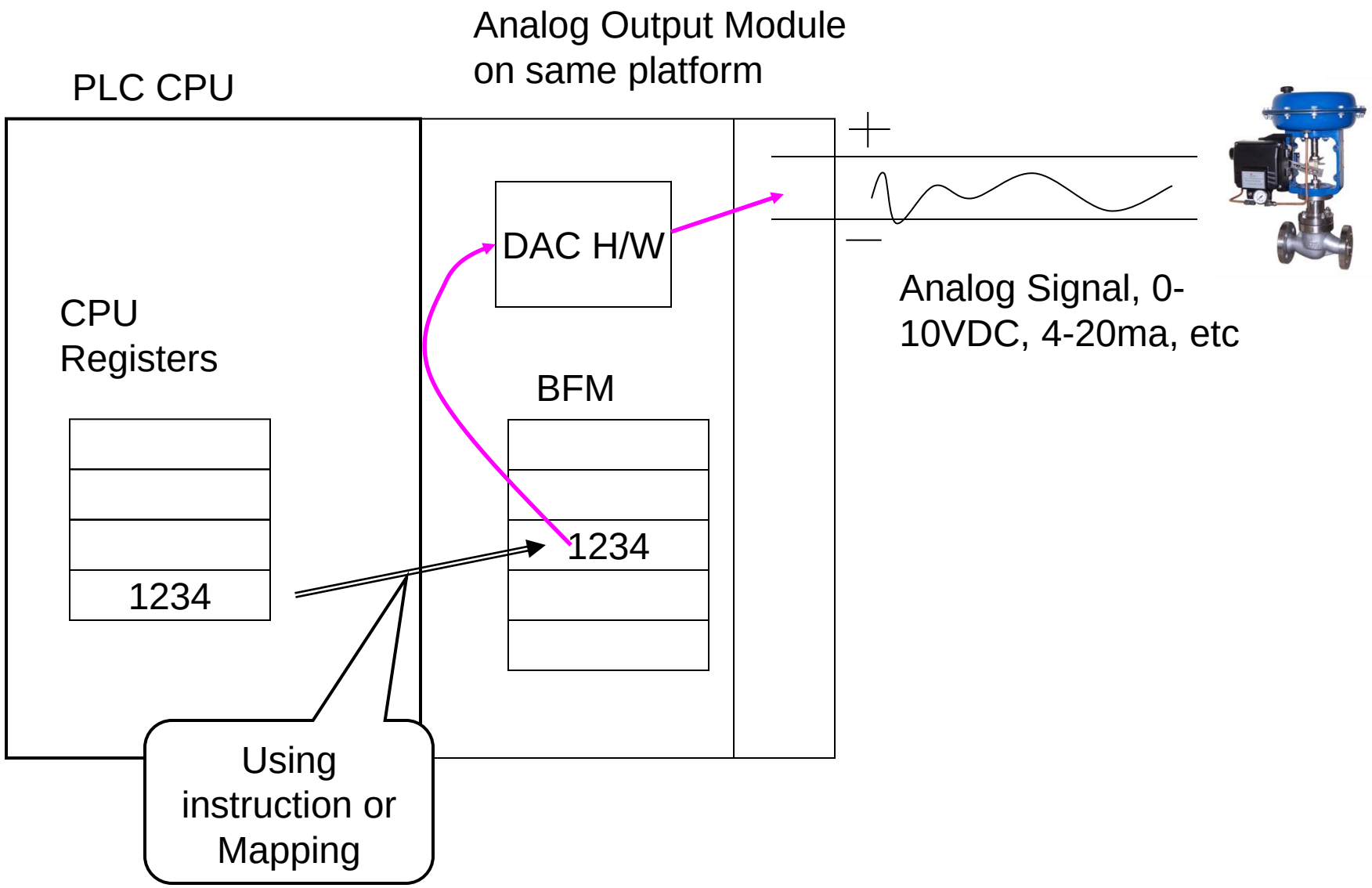

Analog input function

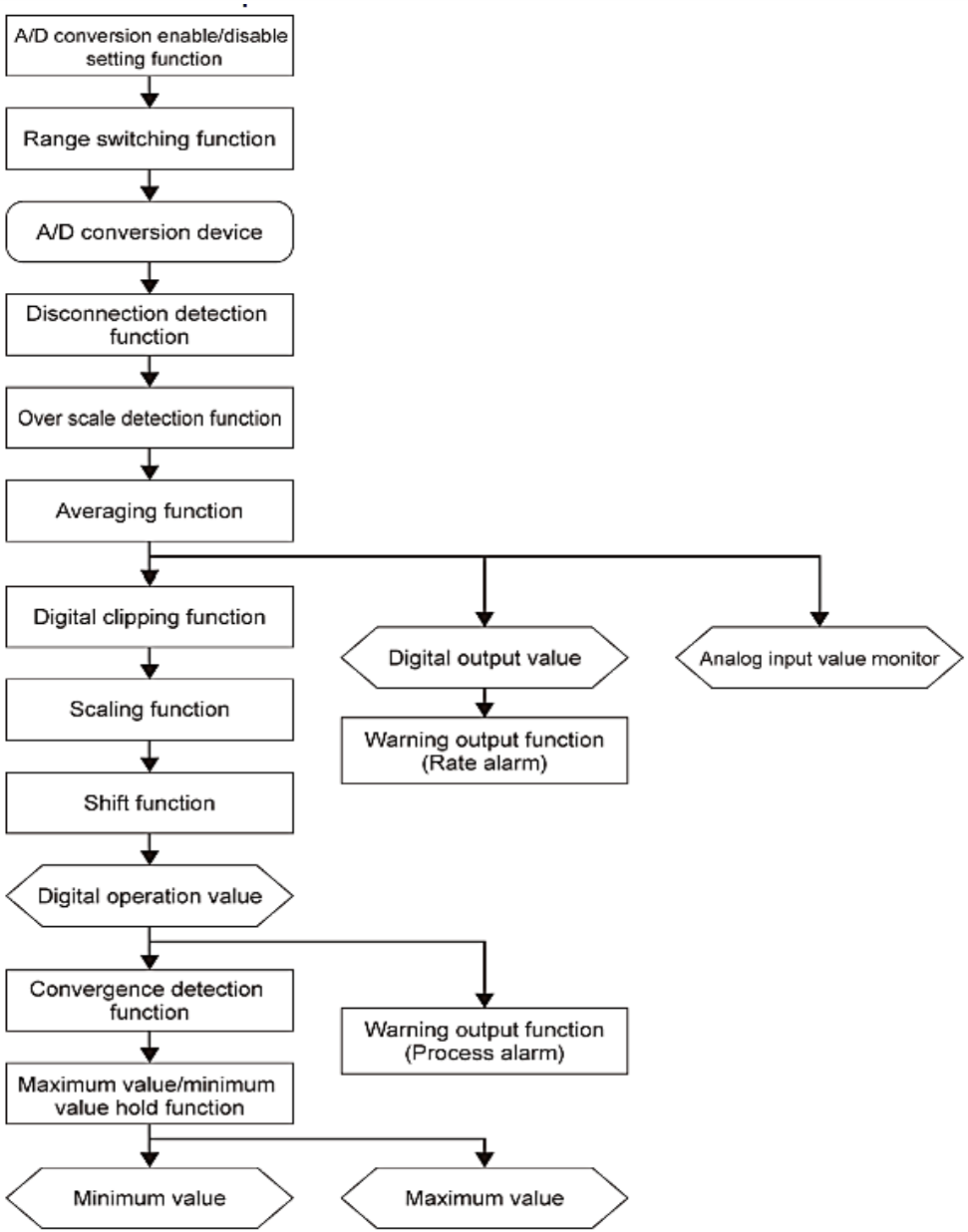

8

Analog O/P Functions

User scale

User scale -> System scale

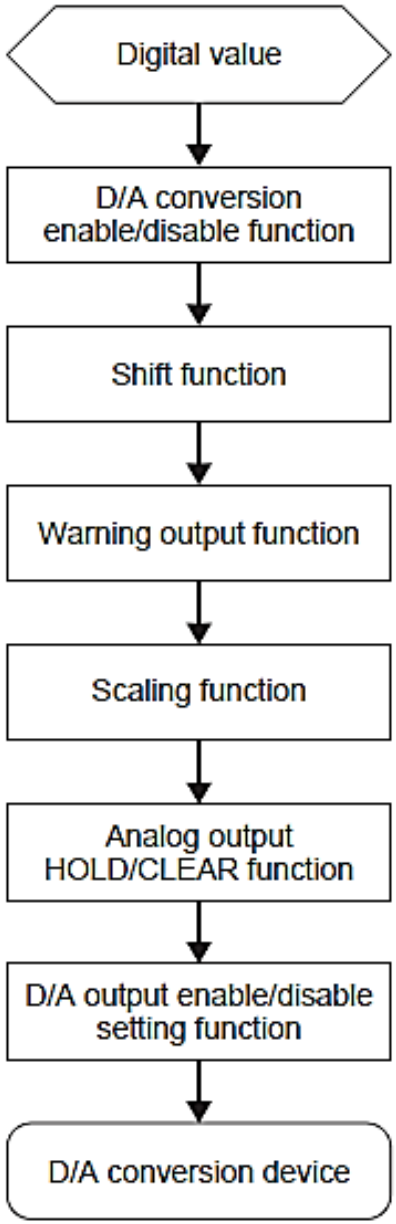

Range Switching Function

- The following Table shows the Analog I/P Ranges & Digital O/P Value.
- Digital output value can be Access from Special register of Adaptor or BFM of Analog module

Input range setting	Digital output value
0 to 10 V	0 to 16000
0 to 5 V	0 to 16000
1 to 5 V	0 to 12800
-10 to +10 V	-8000 to +8000
0 to 20 mA	0 to 16000
4 to 20 mA	0 to 12800
-20 to +20 mA	-8000 to +8000

A/D Conversion Method

- **Sampling processing :** The Analog input is sequentially converted into a digital signal by the END process to create the digital output, and the digital output values and digital operation values are stored.
- **Time average :** A/D conversion is performed for the specified time, the total values are averaged, and the digital output values and digital operation values are stored.
  - The processing count during the specified time changes depending on the number of channels enabled for conversion.
  - Number of processing times = Setting time / Scan time
- **Count average :** The averaging process of the A/D conversion value is set to count, these average values are output as a digital signal, and the digital output values and digital operation values are stored.
  - Processing time = Set number of times × Scan time

A/D Conversion Method

- **Moving average :** The count of averaging process of the A/D conversion value is set to moving average, these average values are output as a digital signal, and the digital output values and digital operation values are stored.
- The following Figure shows the moving average Processing when set number of times is 5.

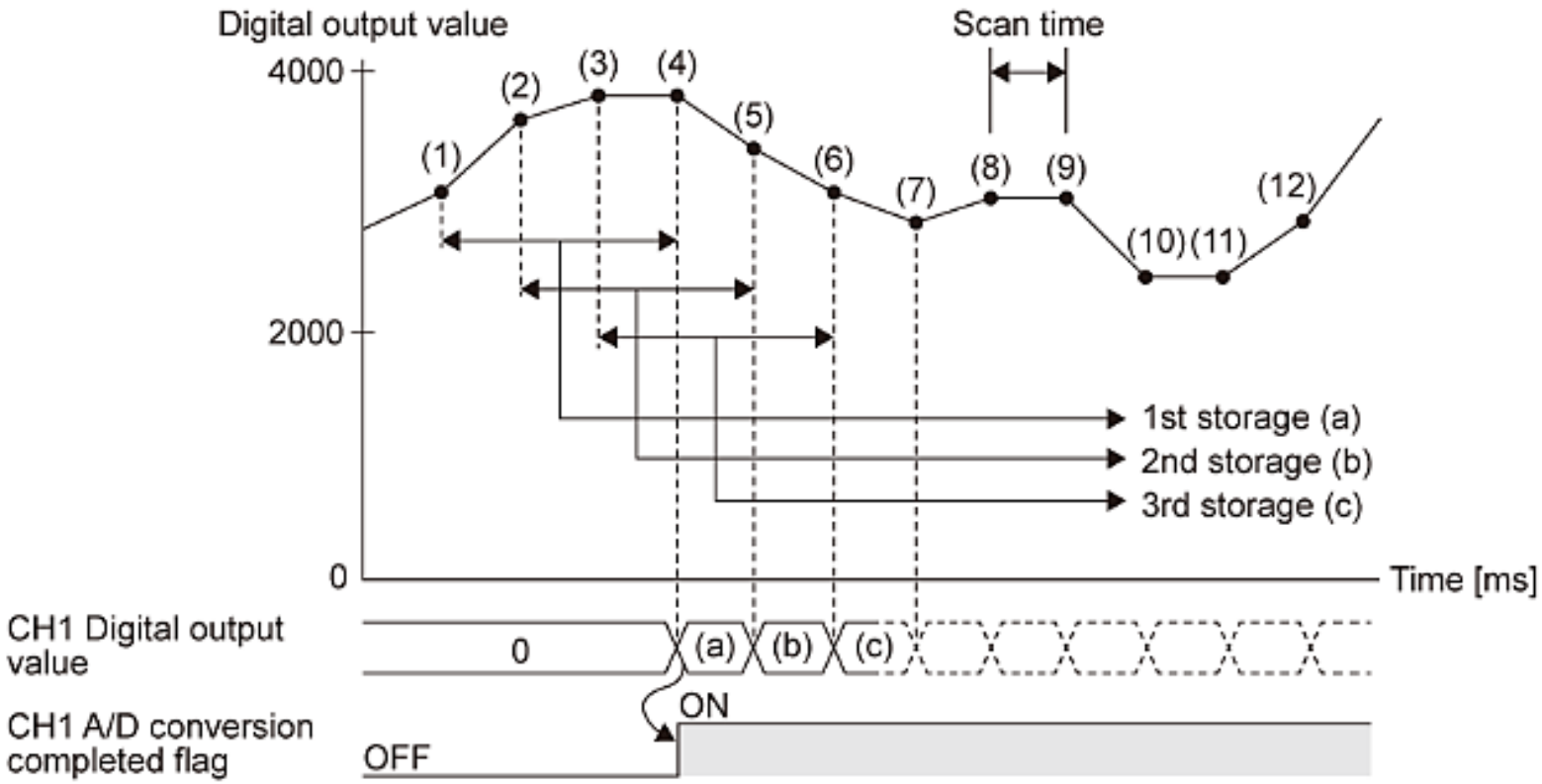

Disconnection Detection Function

- When the input voltage or input current reaches the disconnection detection condition in a enabled channel, alarm occurs and the "disconnection detection flag" turns ON (Alarm code: 0A0H).
- The A/D conversion completion flag" turns OFF, the processing is not executed in the disconnected channel.
- When the "disconnection recovery detection enable/disable setting" is set to "enable", the "disconnection detection flag" turns OFF when the channel is recovered from disconnection. When the channel is recovered from disconnection, A/D conversion is restarted.

Input range	Disconnection detection condition	Disconnection recovery condition
1 to 5 V	Analog input value ≤ 0.5 V	Analog input value>0.5 V
4 to 20 mA	Analog input value ≤ 2 mA	Analog input value>2 mA

Over Scale Detection

- Over Scale is Detected when the Value is less than Lower Limit & Greater than Upper Limit
- When an over-limit is detected, the digital value for this channel before the over-limit is stored, and the A/D conversion complete flag is turned off for this channel.
- Once the analog input value returns in the range between Lower & Upper Limit, the A/D conversion complete flag will be turned on for this channel after the first update when A/D conversion restarts.

Input range	Normal range	Over-scale detection condition	
		Analog input value lower limit	Analog input value upper limit
0 to 10 V	-0.2 to +10.2 V	-0.2 V > Analog input value	+10.2 V < Analog input value
0 to 5 V	-0.1 to +5.1 V	-0.1 V > Analog input value	+5.1 V < Analog input value
1 to 5 V	-0.1 to +5.1 V	-0.1 V > Analog input value	+5.1 V < Analog input value
-10 to +10 V	-10.2 to +10.2 V	-10.2 V > Analog input value	+10.2 V < Analog input value
0 to 20 mA	-0.4 to +20.4 mA	-0.4 mA > Analog input value	+20.4 mA < Analog input value
4 to 20 mA	-0.4 to +20.4 mA	-0.4 mA > Analog input value	+20.4 mA < Analog input value
-20 to +20 mA	-20.4 to +20.4 mA	-20.4 mA > Analog input value	+20.4 mA < Analog input value

Scaling Function

- This function performs the scale conversion on digital output values. The values are converted within a specified range between a scaling upper limit value and scaling lower limit value.
- The converted values are stored in "digital operation value".
- Here 5000 is set to the scaling upper limit value and 1000 is set to the scaling lower limit value for the channel with the input range of 0 to 10 V

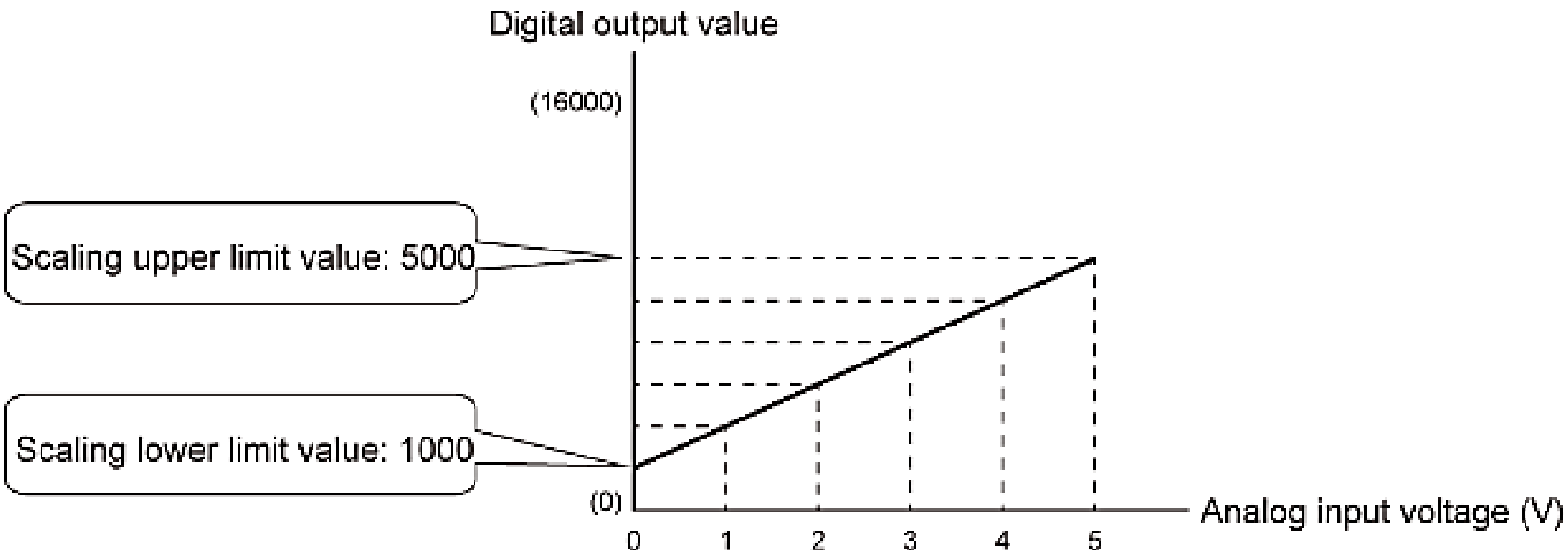

Shift Function

- It is a function to add a user-definable shifting amount to the A/D conversion value and store the digital operation value.

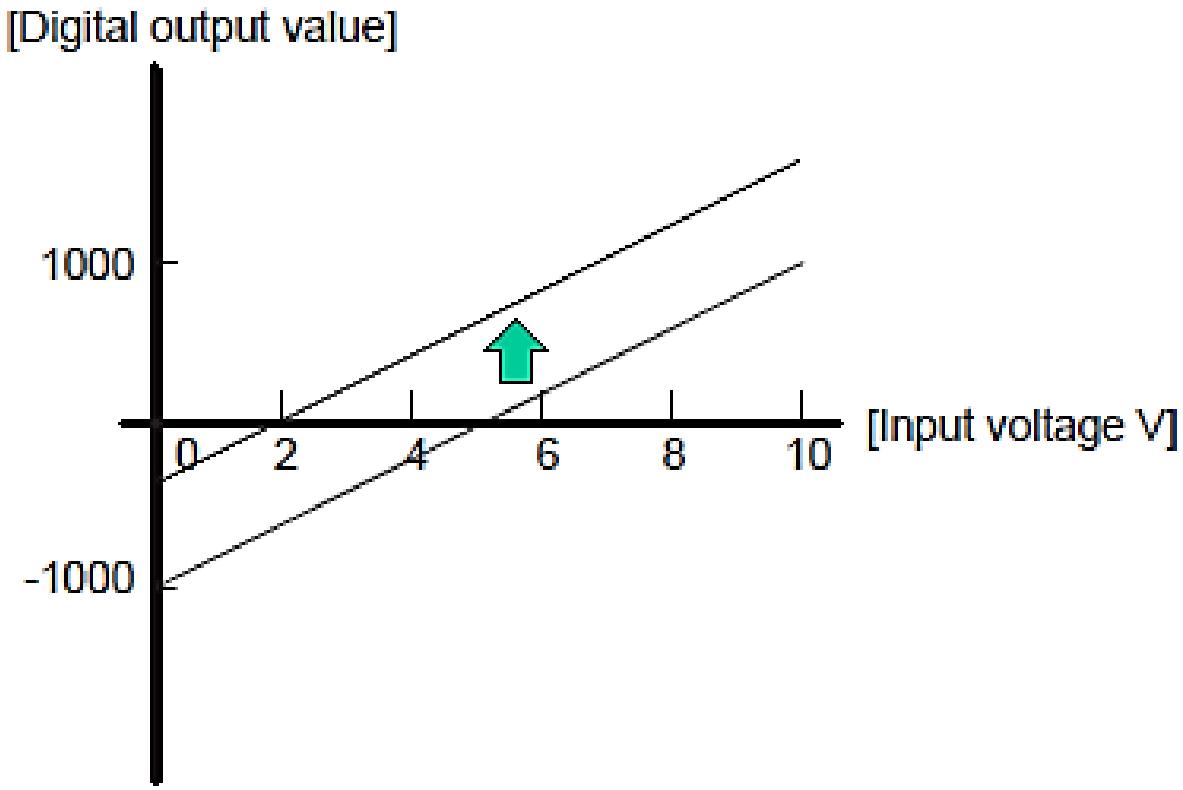

Digital Clipping Function

- This function fixes the range of the digital operation value with the maximum digital output value and the minimum digital output value when the corresponding current or voltage exceeds the input range.

Input range	Output range of digital operation values		
	Digital clipping function is enabled	Digital clipping function is disabled (over-scale is enabled)	Digital clipping function is disabled
0 to 10 V	0 to 16000	-320 to +16320	-384 to +16383
0 to 5 V			
1 to 5 V	0 to 12800	-3520 to +13120	-3584 to +13183
-10 to +10 V	-8000 to +8000	-8160 to +8160	-8192 to +8191
0 to 20 mA	0 to 16000	-320 to +16320	-384 to +16383
4 to 20 mA	0 to 12800	-3520 to +13120	-3584 to +13183
-20 to +20 mA	-8000 to +8000	-8160 to +8160	-8192 to +8191

Warning Output Function

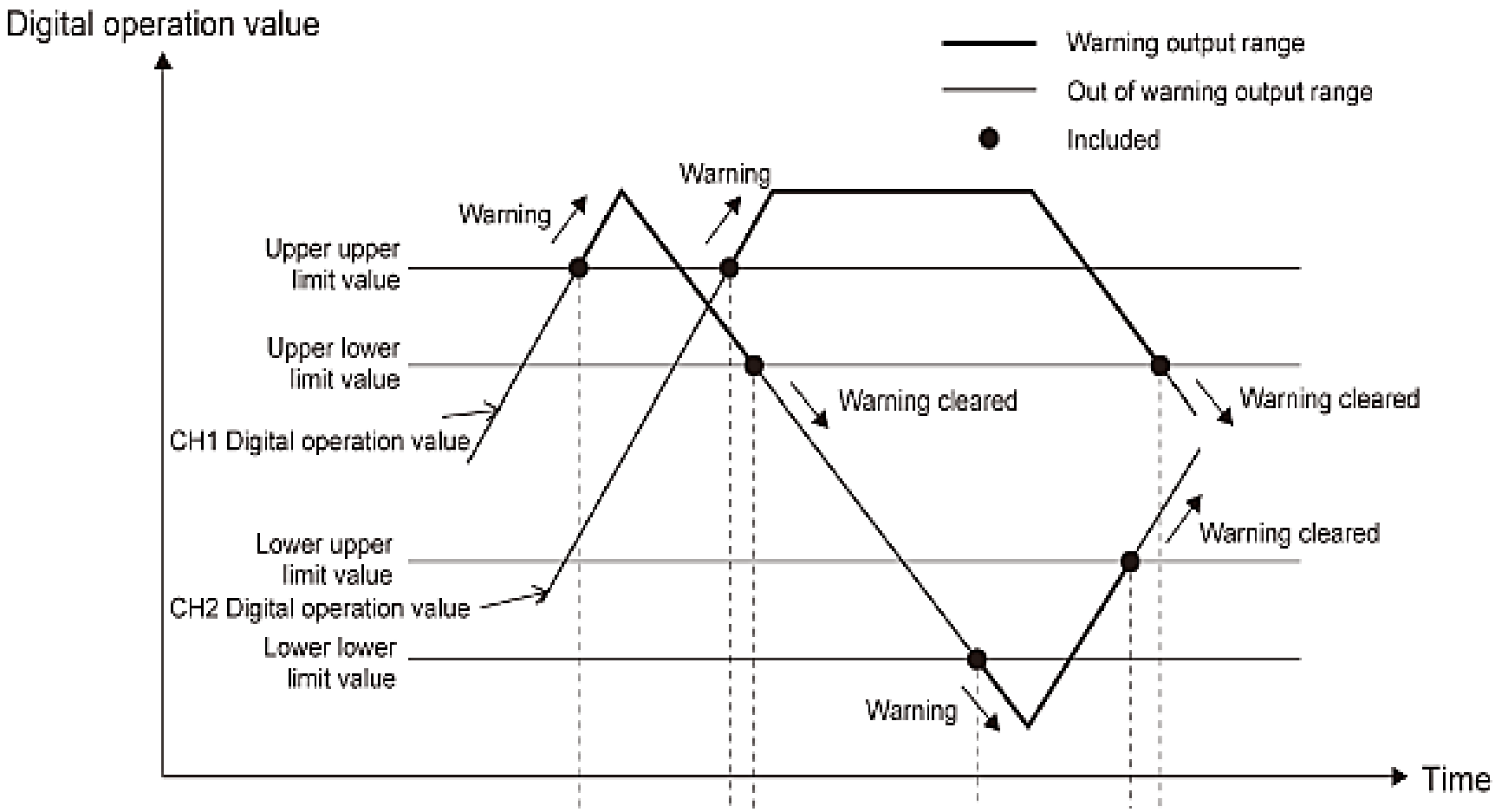

FX5U
Built in Analog I/O

Built in Analog I/O specification

Analog i/p:

- Analog input points : 2 points (2 channels)
- Analog input : Voltage 0 to 10 V DC (input resistance 115.7 kΩ)
- Digital output : Unsigned 12-bit binary
- I/O characteristics
  - Maximum resolution : Digital output value : 0 to 4000
  - Maximum resolution : 2.5 mV

Analog o/p:

- Analog output points : 1 points (1 channels)
- Digital input : Unsigned 12-bit binary
- Analog output : Voltage 0 to 10 V DC (external load resistance 2 k to 1 MΩ)
- I/O characteristics
  - Maximum resolution : Digital input value : 0 to 4000
  - Maximum resolution : 2.5 mV

Terminal layout and wiring

Terminal block	Signal name		Function	
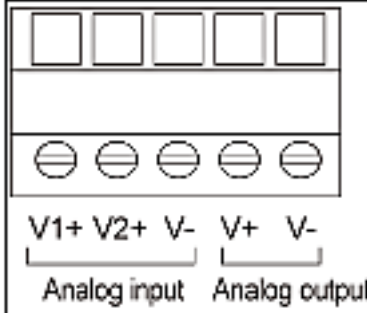	Analog input	V1+	CH1	Voltage input (+)
		V2+	CH1	Voltage input (+)
		V-	CH1/CH2	Voltage input (-)
	Analog output	V+	CH1	Voltage output (+)
		V-	CH1	Voltage output (-)

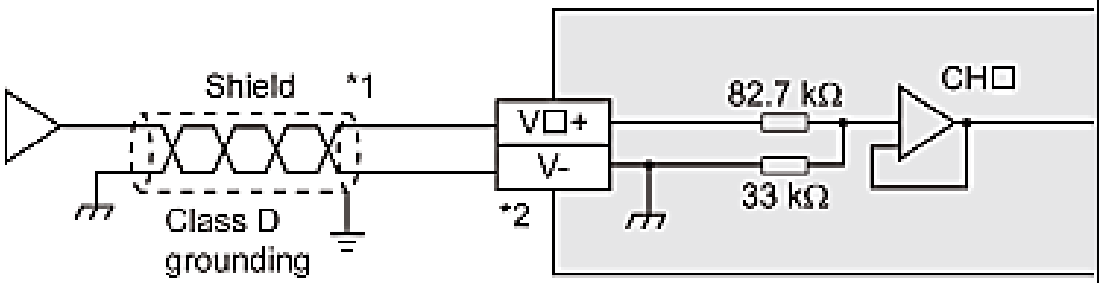

Analog I/P wiring

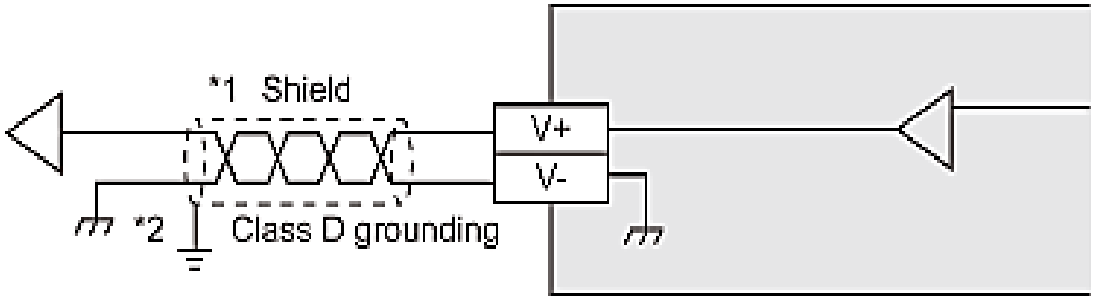

Analog O/P wiring

Parameter Setting for Analog i/p

Basic Settings

Go to [Navigation window] → [Parameter] → [FX5UCPU] → [Module Parameter] → [Analog Input] "Basic Settings"

Following Settings will Appear.

Item	Description	Setting range	Default
A/D Conversion Enable/Disable Setting	Set whether to "enable" or "disable" A/D conversion value output.	・Enable ・Disable	Disable
Average Processing Specify	Execute whether to set "average process" or "sampling processing".	・Sampling ・Time Average ・Count Average ・Moving average	Sampling
Time Average Counts Average Moving average	Set time average, count average, moving average counts during specifying average process for each channel.	User-defined value for the allowable setting range	0

Parameter Setting for Analog i/p

Basic Settings

Go to [Navigation window] → [Parameter] → [FX5UCPU] → [Module Parameter] → [Analog Input] "Basic Settings"

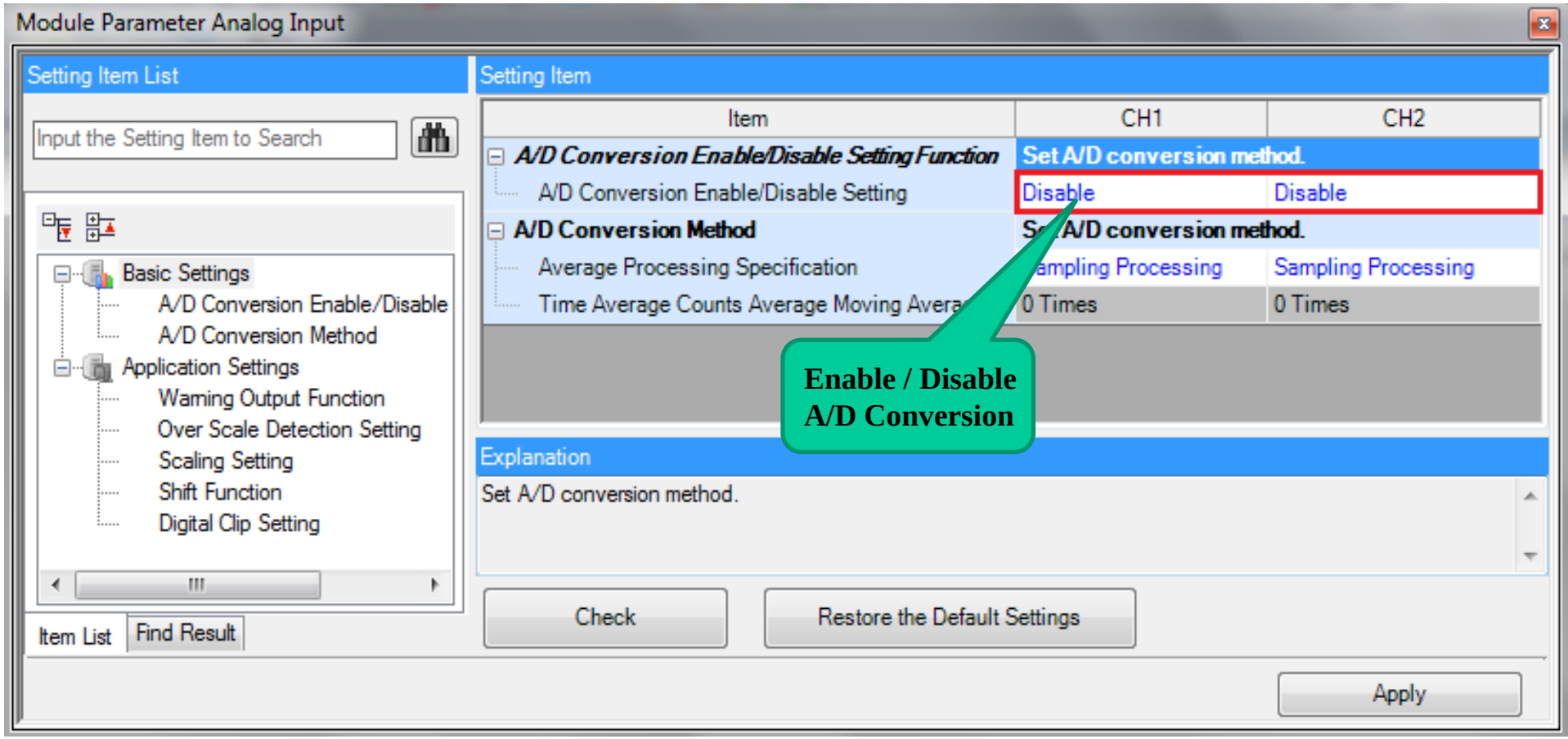

Parameter Setting for Analog i/p

Application Setting

Navigation window → [Parameter] → [FX5UCPU] → [Module Parameter] → [Analog Input] "Application Settings"

Following Settings will Appear.

Item	Description	Setting range	Default
Process Alarm Warning Setting	Set whether to "enable" or "disable" process alarm warning.	・Enable ・Disable	Disable
Process Alarm Upper Upper Limit Value	Set upper upper limit value of digital output value.	-32768 to +32767	0
Process Alarm Upper Lower Limit Value	Set upper lower limit value of digital output value.	-32768 to +32767	0
Process Alarm Lower Upper Limit Value	Set lower upper limit value of digital output value.	-32768 to +32767	0
Process Alarm Lower Lower Limit Value	Set lower lower limit value of digital output value.	-32768 to +32767	0
Over Scale Detection Enable/Disable	Set whether to "enable" or "disable" over scale detection.	・Enable ・Disable	Enable
Scaling Enable/Disable	Set whether to "enable" or "disable" scaling.	・Enable ・Disable	Disable
Scaling Upper Limit Value	Set scaling conversion upper limit value.	-32768 to +32767	0
Scaling Lower Limit Value	Set scaling conversion lower limit value.	-32768 to +32767	0
Shifting Amount	Set shifting amount for shifting function.	-32768 to +32767	0
Digital Clip Enable/Disable	Whether to "enable" or "disable" the digital clip.	・Enable ・Disable	Disable

Parameter Setting for Analog i/p

Application Setting

Navigation window → [Parameter] → [FX5UCPU] → [Module Parameter] → [Analog Input] "Application Settings"

Module Parameter Analog Input

Setting Item List

Input the Setting Item to Se

- Basic Settings
  - A/D Conversion Ena
  - A/D Conversion Me
- Application Settings

Setting Item

Item	CH1	CH2
Warning Output Function	**Execute the setting related to A/D conversion warning.**	
Process Alarm Warning Setting	Disable	Disable
Process Alarm Upper Upper Limit Value	0	0
Process Alarm Upper Lower Limit Value	0	0
Process Alarm Lower Upper Limit Value	0	0
Process Alarm Lower Lower Limit Value	0	0
Over Scale Detection	**Execute the setting related to detection of analog input exceeding the setting range.**	
Over Scale Detection Enable/Disable	Enable	Enable
Scaling Setting	**Execute the setting related to A/D conversion scaling.**	
Scaling Enable/Disable	Disable	Disable
Scaling Upper Limit Value	0	0
Scaling Lower Limit Value	0	0
Shift Function	**Execute the setting related to A/D conversion shift function.**	
Shifting Amount	0	0
Digital Clip Setting	**Execute the setting related to A/D conversion digital clip function.**	
Digital Clip Enable/Disable	Disable	Disable

Special Relays for Analog i/p

Special relays		Description	R/W
CH1	CH2		
SM6020	SM6060	A/D conversion completed flag	R
SM6021	SM6061	A/D conversion enable/disable setting	R/W
SM6022	SM6062	Scaling over detection flag	R
SM6024	SM6064	Over scale detection enable/disable setting	R/W
SM6025	SM6065	Maximum value/minimum value reset completed flag	R
SM6026	SM6066	Maximum value reset request	R/W
SM6027	SM6067	Minimum value reset request	R/W
SM6028	SM6068	Scaling enable/disable setting	R/W
SM6029	SM6069	Digital clipping enable/disable setting	R/W
SM6031	SM6071	Warning output flag (process alarm upper limit)	R
SM6032	SM6072	Warning output flag (process alarm lower limit)	R
SM6033	SM6073	Warning output setting (process alarm)	R/W
SM6057	SM6097	A/D conversion alarm clear request	R/W
SM6058	SM6098	A/D conversion alarm flag	R
SM6059	SM6099	A/D conversion error flag	R

Special Registers for Analog i/p

Special registers		Description	R/W
CH1	CH2		
SD6020	SD6060	Digital output value	R
SD6021	SD6061	Digital operation value	R
SD6022	SD6062	Analog input voltage monitor	R
SD6023	SD6063	Average processing specify	R/W
SD6024	SD6064	Time Average/Count Average/Moving Average setting	R/W
SD6026	SD6066	Maximum value	R
SD6027	SD6067	Minimum value	R
SD6028	SD6068	Scaling upper limit value	R/W
SD6029	SD6069	Scaling lower limit value	R/W
SD6030	SD6070	Conversion value shift amount	R/W
SD6031	SD6071	Process alarm upper upper limit value	R/W
SD6032	SD6072	Process alarm upper lower limit value	R/W
SD6033	SD6073	Process alarm lower upper limit value	R/W
SD6034	SD6074	Process alarm lower lower limit value	R/W
SD6058	SD6098	A/D Conversion latest alarm code	R
SD6059	SD6099	A/D Conversion latest error code	R

Parameter Setting for Analog o/p

Basic Settings

Go to [Navigation window] → [Parameter] → [FX5UCPU] → [Module Parameter] → [Analog Output] "Basic Settings"

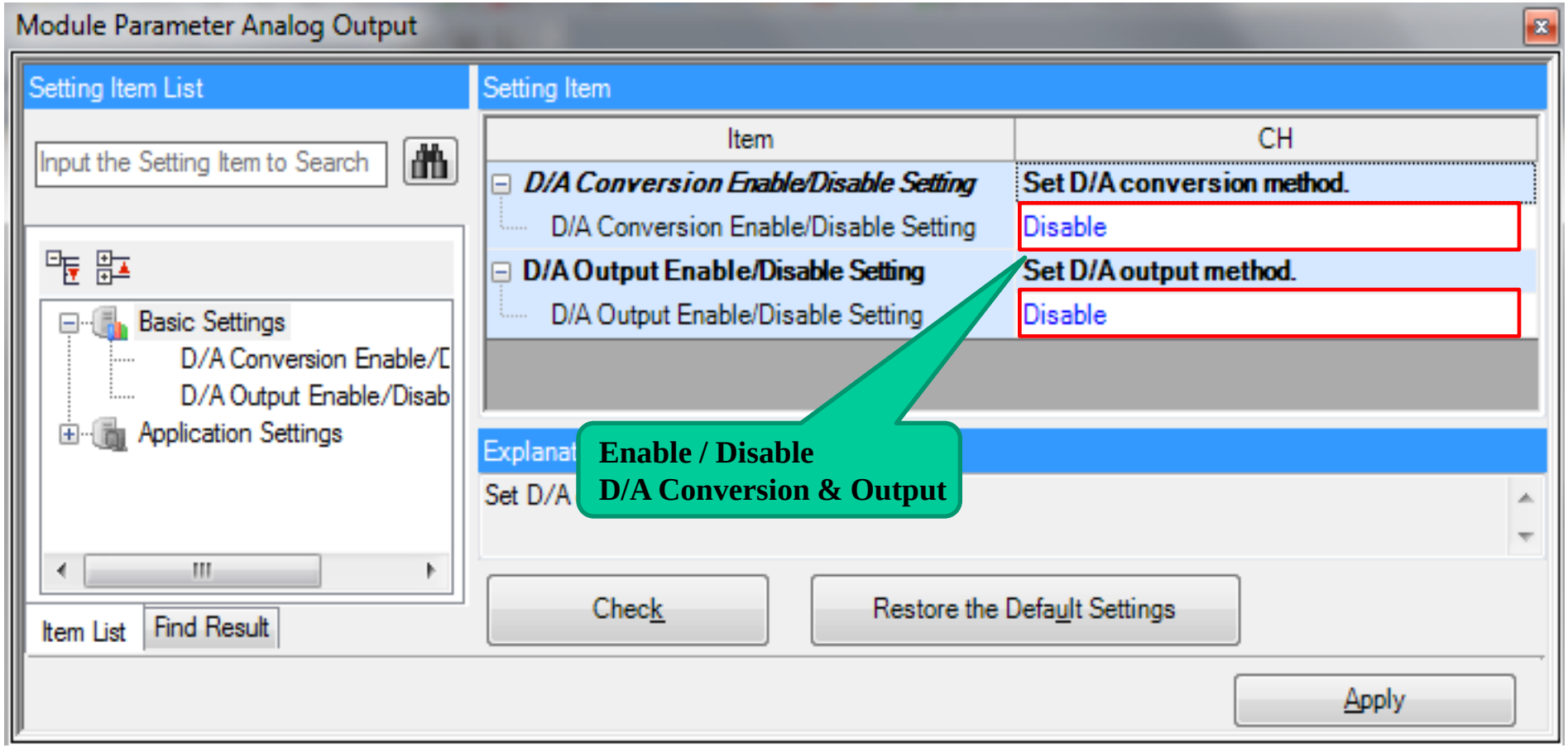

Parameter Setting for Analog o/p

Application Setting

Navigation window →[Parameter]→[FX5UCPU] → [Module Parameter]→ [Analog Output] "Application Settings"

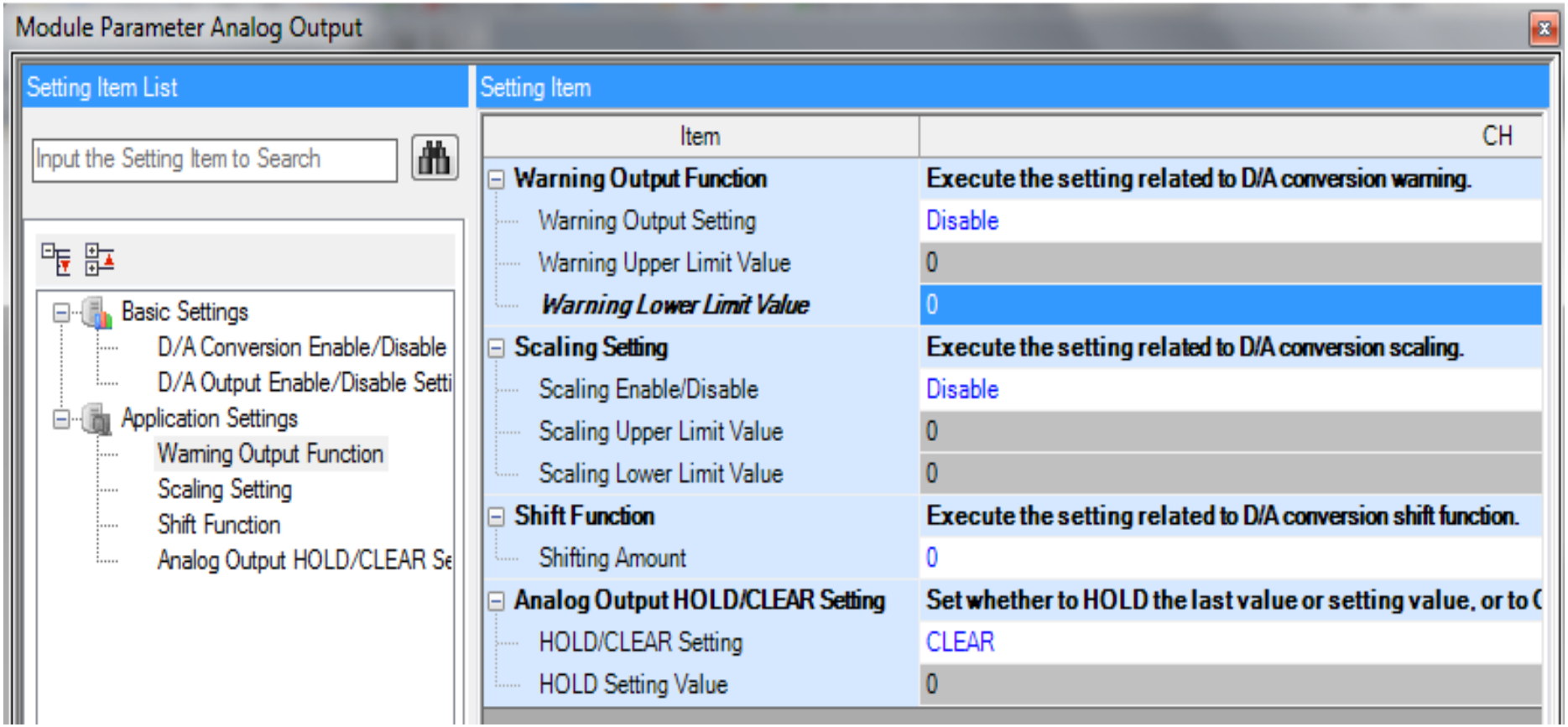

Special Relays for Analog o/p

Special relays	Description	R/W
SM6180	D/A conversion enable/disable setting	R/W
SM6181	D/A output enable/disable setting	R/W
SM6188	Scaling enable/disable setting	R/W
SM6191	Warning output upper limit value flag	R
SM6192	Warning output lower limit value flag	R
SM6193	Warning output setting	R/W
SM6217	D/A conversion alarm clear request	R/W
SM6218	D/A conversion alarm flag	R
SM6219	D/A conversion error flag	R

Special Registers for Analog o/p

Special registers	Description	R/W
SD6180	Digital value	R/W
SD6181	Digital operation value	R
SD6182	Analog output voltage monitor	R
SD6183	HOLD/CLEAR function setting	R/W
SD6184	HOLD setting value	R/W
SD6188	Scaling upper limit value	R/W
SD6189	Scaling lower limit value	R/W
SD6190	Input value shift amount	R/W
SD6191	Warning output upper limit value	R/W
SD6192	Warning output lower limit value	R/W
SD6218	D/A conversion latest alarm code	R
SD6219	D/A conversion latest error code	R

FX5-4AD-ADP

Specification

Item	Specification			
Number of analog input points	4 points (4 channels)			
Analog input voltage	-10 to +10 V DC (input resistance 1 M Ω)			
Analog input current	-20 to +20 mA DC (input resistance 250 Ω)			
Digital output value	14-bit binary value			
Input characteristics, resolution *1	Analog input range		Digital output value	Resolution
	Voltage	0 to 10 V	0 to 16000	625 μ V
		0 to 5 V	0 to 16000	312.5 μ V
		1 to 5 V	0 to 12800	312.5 μ V
		-10 to +10 V	-8000 to +8000	1250 μ V
	Current	0 to 20 mA	0 to 16000	1.25 μ A
		4 to 20 mA	0 to 12800	1.25 μ A
		-20 to +20 mA	-8000 to +8000	2.5 μ A
Accuracy (accuracy for the full scale of digital output value)	Ambient temperature 25 ± 5 ℃ : within ± 0.1 % (± 16 digit) Ambient temperature 0 to 55 ℃ : within .0.2 % (± 32 digit) Ambient temperature -20 to 0 ℃ *2: within .0.3 % (± 48 digit)			
Conversion speed	Maximum 450 μ s (The data will be updated at every scan time of the PLC.)			
Absolute maximum input	Voltage: ± 15 V, Current: ±30 mA			
Isolation method	Between input terminal and PLC: Photocoupler Between input channels: Non-isolation			
Number of occupied I/O points	0 point (This number is not related to the maximum number of I/O points of the PLC.)			

Characteristics

- Voltage Input:

No.	Input range setting	Offset value	Gain value	Digital output value	Resolution
(1)	0 to 10 V	0 V	10 V	0 to 16000	625 μ V
(2)	0 to 5 V	0 V	5 V	0 to 16000	312.5 μ V
(3)	1 to 5 V	1 V	5 V	0 to 12800	312.5 μ V
(4)	-10 to +10 V	0 V	10 V	-8000 to +8000	1250 μ V

- Current Input:

No.	Input range setting	Offset value	Gain value	Digital output value	Resolution
(1)	0 to 20 mA	0 mA	20 mA	0 to 16000	1.25 μ A
(2)	4 to 20 mA	4 mA	20 mA	0 to 12800	1.25 μ A
(3)	-20 to +20 mA	0 mA	20 mA	-8000 to +8000	2.5 μ A

Terminal Wiring

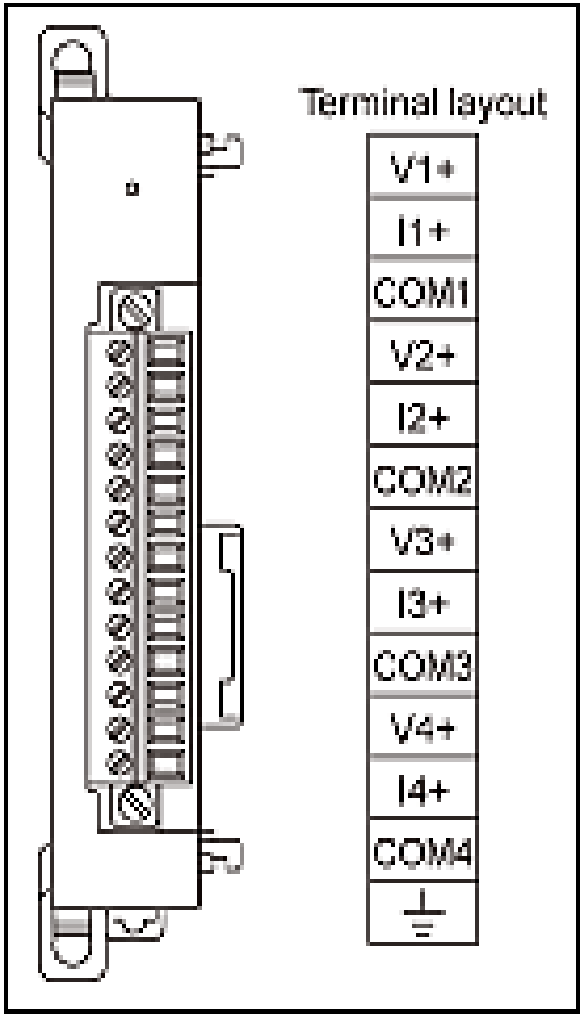

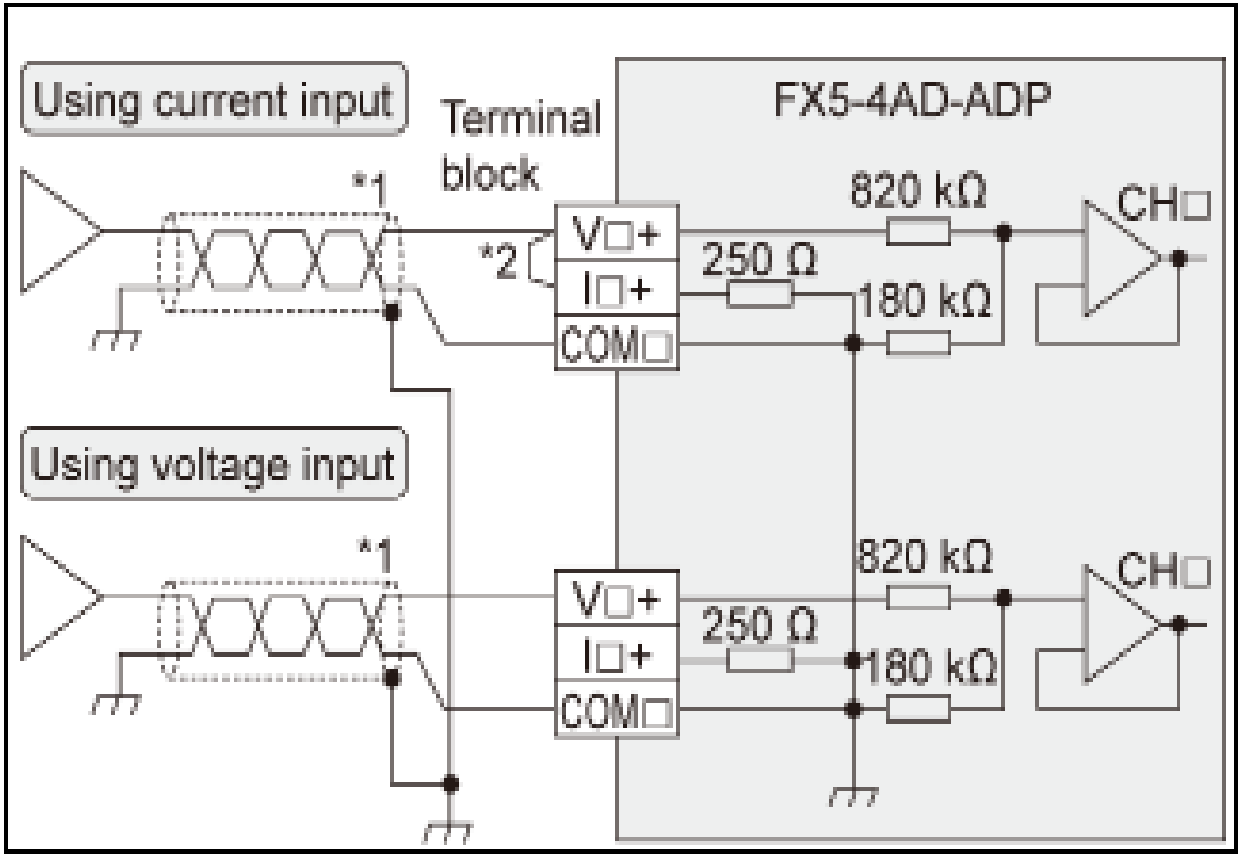

Terminal Wiring

Basic Parameter Setting

- Navigation window ⇨ [Parameter] ⇨ [Module Information] ⇨ [FX5-4AD-ADP] ⇨ [Module Parameter] ⇨ "Basic Settings“

- Following Settings Will Display

Item	Description	Setting range	Default
A/D Conversion Enable/Disable Setting	Set whether to "enable" or "disable" AD conversion value output.	・Disable ・Enable	Disable
Average Processing Specify	Execute whether to set "average process" or "sampling processing".	・Sampling Processing ・Time Average ・Count Average ・Moving Average	Sampling Processing
Time Average Counts Average Moving Average	Set average time, average counts, moving average counts when specifying average process for each channel.	Set range setting for each channel.	—
Input range setting	Setting area for input range setting.	・Input Voltage (0 to 10 V) ・Input Voltage (0 to 5 V) ・Input Voltage (1 to 5 V) ・Input Voltage (-10 to 10 V) ・Input Current (0 to 20 mA) ・Input Current (4 to 20 mA) ・Input Current (-20 to 20 mA)	Input Voltage (0 to 10 V)

Basic Parameter Setting

- Navigation window ⇨ [Parameter] ⇨ [Module Information] ⇨ [FX5-4AD-ADP] ⇨ [Module Parameter] ⇨ "Basic Settings"

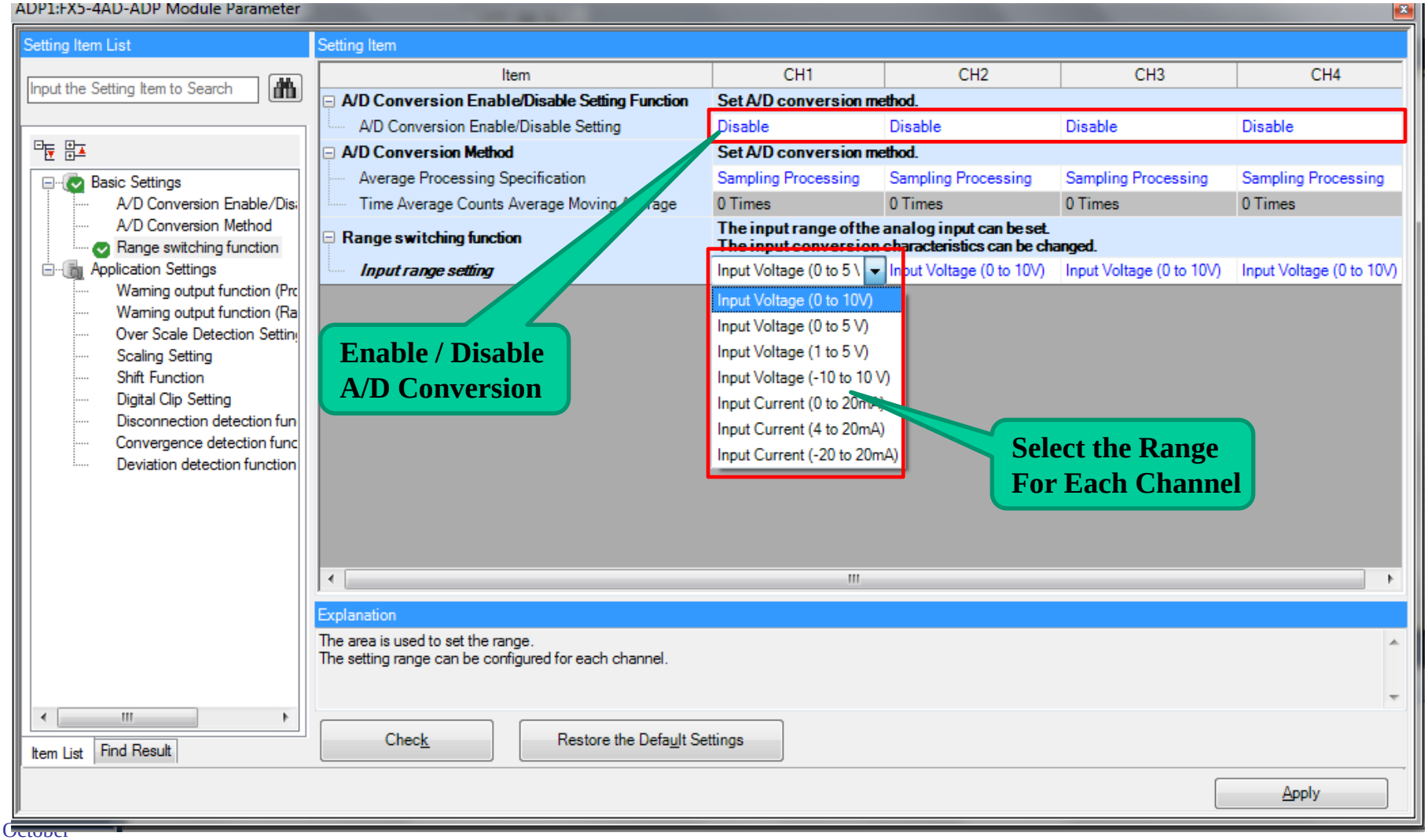

Application Parameter Setting

- Navigation window ⇨ [Parameter] ⇨ [Module Information] ⇨ [FX5-4AD-ADP] ⇨ [Module Parameter] ⇨ “Application setting"

Item	Description	Setting range	Default
Warning output setting (Process alarm)	Set whether to "enable" or "disable" process alarm warning.	・Disable ・Enable	Disable
Process Alarm Upper Upper Limit Value	Set upper upper limit value of digital output value.	-32768 to +32767	—
Process Alarm Upper Lower Limit Value	Set upper lower limit value of digital output value.	-32768 to +32767	—
Process Alarm Lower Upper Limit Value	Set lower upper limit value of digital output value.	-32768 to +32767	—
Process Alarm Lower Lower Limit Value	Set lower lower limit value of digital output value.	-32768 to +32767	—
Warning output setting (Rate alarm)	Set whether to "enable" or "disable" the rate alarm warning.	・Disable ・Enable	Disable
Rate alarm warning detection period setting	Set the value for the sampling cycle to detect the rate alarm warning.	1 to 10000	—
Rate alarm upper limit value	Set the upper limit value of the digital output value.	-999 to +1000	—
Rate alarm lower limit value	Set the lower limit value of the digital output value.	-1000 to +999	—
Over Scale Detection Enable/Disable	Set whether to "enable" or "disable" over scale detection.	・Disable ・Enable	Disable
Scaling Enable/Disable	Set whether to "enable" or "disable" scaling.	・Disable ・Enable	Disable
Scaling Upper Limit Value	Set the upper limit value for scaling calculation.	-32768 to +32767	—
Scaling Lower Limit Value	Set the lower limit value for scaling calculation.	-32768 to +32767	—
Shifting amount to conversion value	Set shifting amount for shifting function.	-32768 to +32767	0
Digital Clip Enable/Disable	Whether to "enable" or "disable" digital clip.	・Disable ・Enable	Disable
Disconnection detection enable/disable setting	Set whether to "enable" or "disable" disconnection detection.	・Disable ・Enable	Disable
Disconnection recovery detection enable/disable setting	Set whether to "enable" or "disable" disconnection recovery detection.	・Disable ・Enable	Disable
Convergence detection enable/disable setting	Set whether to "enable" or "disable" convergence detection.	・Disable ・Enable	Disable
Convergence detection upper limit value	Set the upper limit value for convergence range.	-32767 to +32767	—
Convergence detection lower limit value	Set the lower limit value for convergence range.	-32768 to +32766	—
Detection time setting for Convergence detection	Set the convergence time.	1 to 10000	—
Deviation detection trigger between channels	Set whether to "enable" or "disable" deviation detection between channels.	・Disable ・Enable	Disable
Deviation value for deviation detection between channels	Set the deviation value for deviation detection between channels.	0 to 65535	—

Application Parameter Setting

- Navigation window ⇨ [Parameter] ⇨ [Module Information] ⇨ [FX5-4AD-ADP] ⇨ [Module Parameter] ⇨ “Application setting"

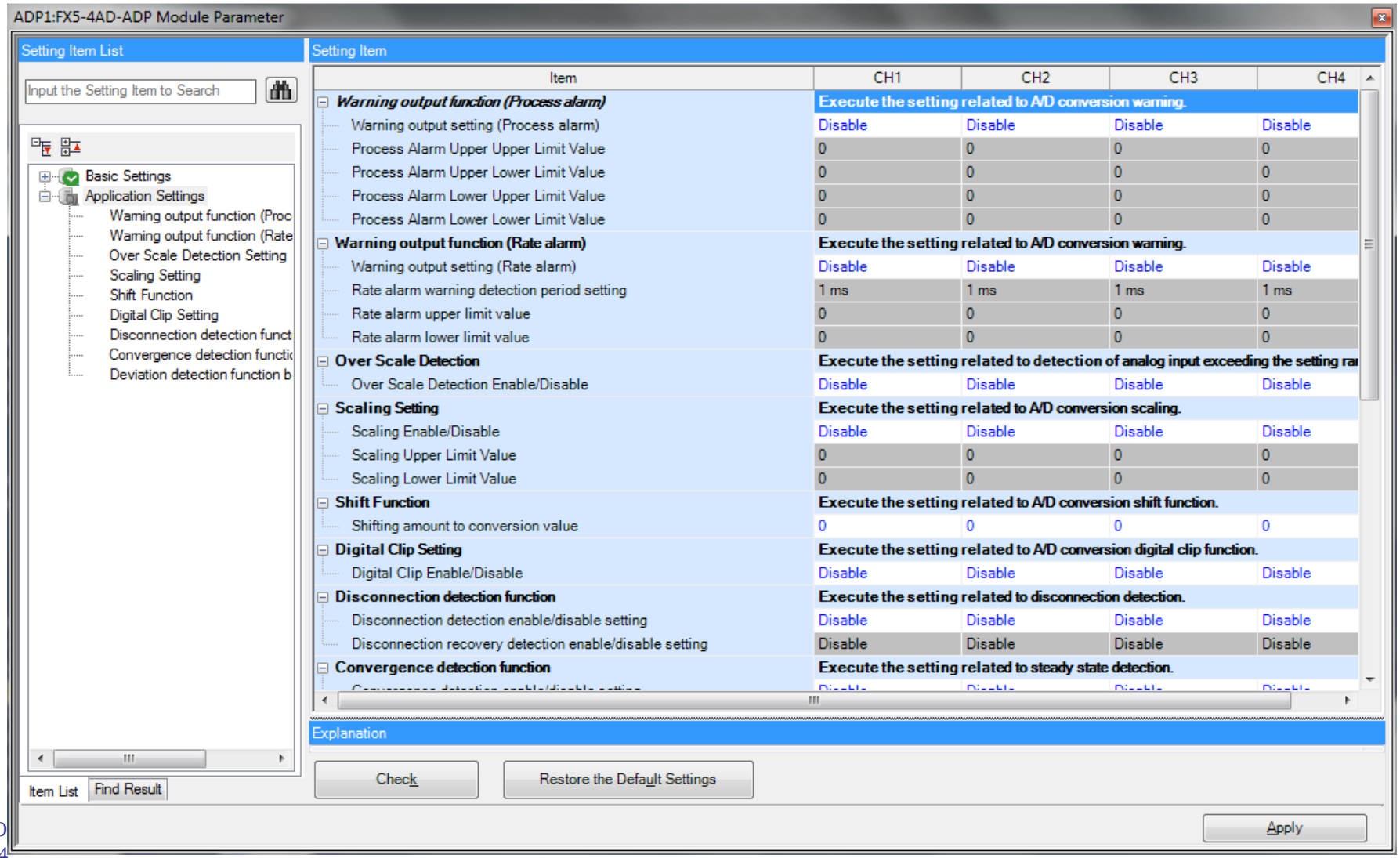

Special Registers FX5-4AD-ADP

Name	Connection part	Special register			
		CH1	CH2	CH3	CH4
Digital output value	1st adapter	SD6300	SD6340	SD6380	SD6420
	2nd adapter	SD6660	SD6700	SD6740	SD6780
	3rd adapter	SD7020	SD7060	SD7100	SD7140
	4th adapter	SD7380	SD7420	SD7460	SD7500
Digital operation value	1st adapter	SD6301	SD6341	SD6381	SD6421
	2nd adapter	SD6661	SD6701	SD6741	SD6781
	3rd adapter	SD7021	SD7061	SD7101	SD7141
	4th adapter	SD7381	SD7421	SD7461	SD7501

Trouble Shooting

For Trouble shooting of FX5-4AD-ADP check the followings.

1. Special Relays : Check the Error Status & Alarm Status

Name	Connection part	Special relay			
		CH1	CH2	CH3	CH4
A/D conversion alarm flag	1st adapter	SM6338	SM6378	SM6418	SM6458
	2nd adapter	SM6698	SM6738	SM6778	SM6818
	3rd adapter	SM7058	SM7098	SM7138	SM7178
	4th adapter	SM7418	SM7458	SM7498	SM7538
A/D conversion error flag	1st adapter	SM6339	SM6379	SM6419	SM6459
	2nd adapter	SM6699	SM6739	SM6779	SM6819
	3rd adapter	SM7059	SM7099	SM7139	SM7179
	4th adapter	SM7419	SM7459	SM7499	SM7539

Trouble Shooting

2. Special Registers : Check the Error code & Alarm code (refer the FX5-4AD-ADP manual for the details of code)

Name	Connection part	Special register			
		CH1	CH2	CH3	CH4
A/D conversion latest alarm code	1st adapter	SD6338	SD6378	SD6418	SD6458
	2nd adapter	SD6698	SD6738	SD6778	SD6818
	3rd adapter	SD7058	SD7098	SD7138	SD7178
	4th adapter	SD7418	SD7458	SD7498	SD7538
A/D conversion latest error code	1st adapter	SD6339	SD6379	SD6419	SD6459
	2nd adapter	SD6699	SD6739	SD6779	SD6819
	3rd adapter	SD7059	SD7099	SD7139	SD7179
	4th adapter	SD7419	SD7459	SD7499	SD7539

FX5-4DA-ADP

Specification

Item	Specification			
Number of analog output points	4 points (4 channels)			
Digital input	14-bit binary value			
Analog output voltage	-10 to +10 V DC (external load resistance value 1k to 1 M Ω)			
Analog output current	0 to 20 mA DC (external load resistance value 0 to 500 Ω)			
Output characteristics, resolution *1	Analog output range		Digital value	Resolution
	Voltage	0 to 10 V	0 to 16000	625 μ V
		0 to 5 V	0 to 16000	312.5 μ V
		1 to 5 V	0 to 16000	250 μ V
		-10 to +10 V	-8000 to +8000	1250 μ V
	Current	0 to 20 mA	0 to 16000	1.25 μ A
		4 to 20 mA	0 to 16000	1 μ A
Accuracy (accuracy for the full scale of the analog output value)	Ambient temperature 25 ± 5 ℃ : ± 0.1 % (Voltage ± 20 mV, Current ± 20 μ A) Ambient temperature -20 to 55 ℃ *2: ± 0.2 % (Voltage ± 40 mV, Current ± 40 μ A)			
Conversion speed	Maximum 950 μ s (The data will be updated at every scan time of the PLC.)			
Isolation method	Between output terminal and PLC: Photocoupler Between output channels: Non-isolation			
Number of occupied I/O points	0 point (This number is not related to the maximum number of I/O points of the PLC.)			

Terminal Wiring

Terminal block	Signal name	Function	
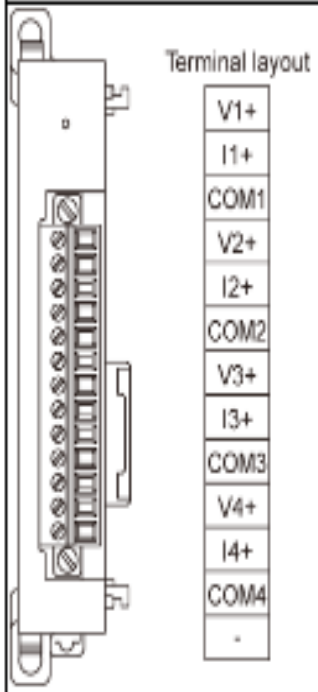	V1+	CH1	Voltage output
	I1+		Current output
	COM1		Common
	V2+	CH2	Voltage output
	I2+		Current output
	COM2		Common
	V3+	CH3	Voltage output
	I3+		Current output
	COM3		Common
	V4+	CH4	Voltage output
	I4+		Current output
	COM4		Common
	—	Do not connected.	

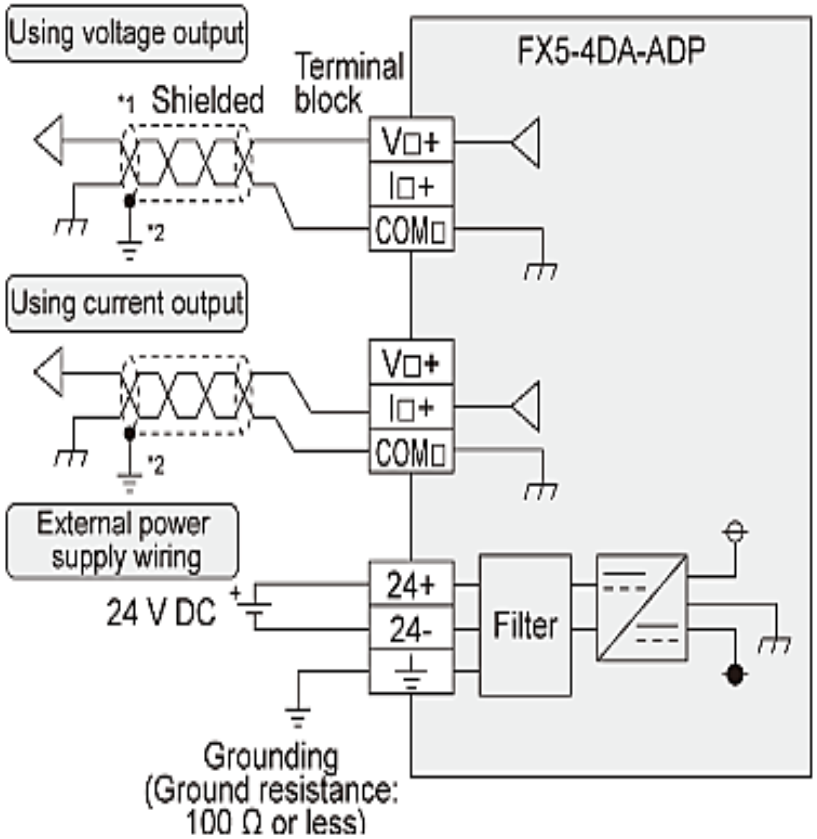

Basic Parameter Setting

- Navigation window ⇒ [Parameter] ⇒ [Module Information] ⇒ [FX5-4DA-ADP] ⇒ [Module Parameter] ⇒ "Basic Settings"

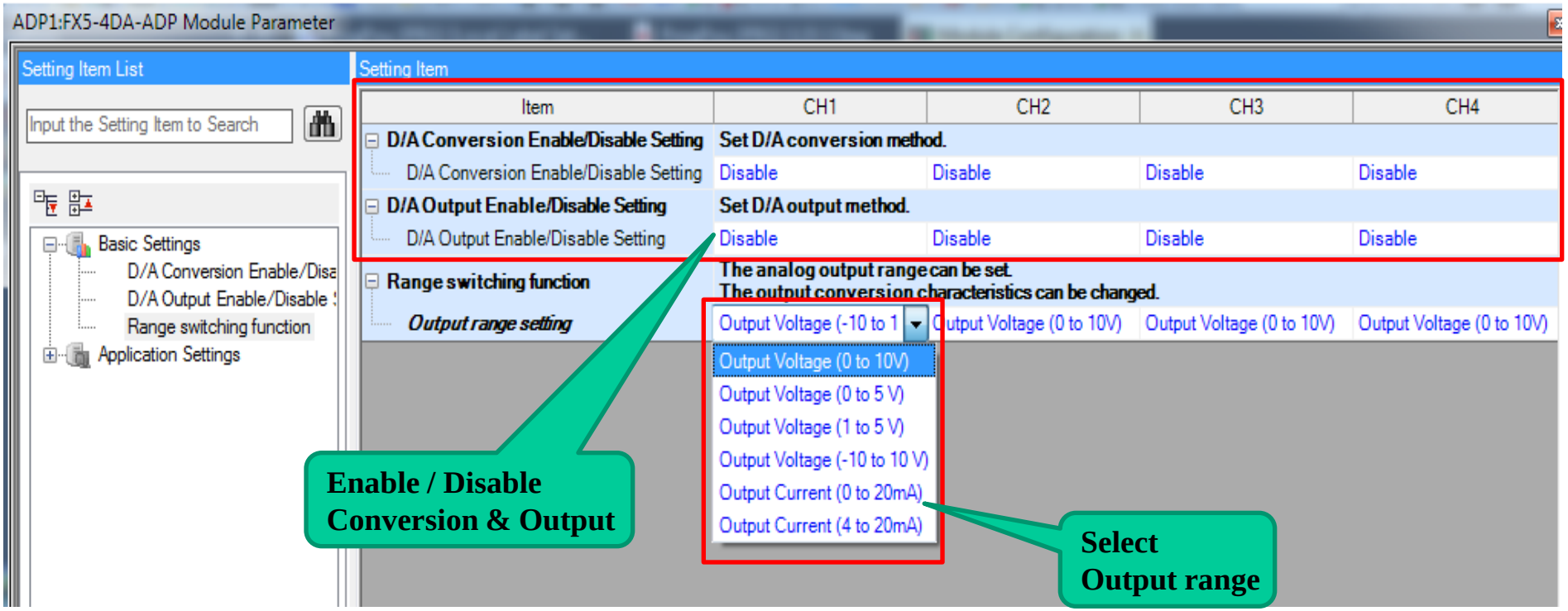

Application Parameter Setting

- Navigation window ⟹ [Parameter] ⟹ [Module Information] ⟹ [FX5-4DA-ADP] ⟹ [Module Parameter] ⟹ “Application setting"

ADP2:FX5-4DA-ADP Module Parameter

Setting Item List

Input the Setting Item to Search

- Basic Settings
  - D/A Conversion Enable/Disable Setti
  - D/A Output Enable/Disable Setting
  - Range switching function
- Application Settings
  - Warning Output Function
  - Scaling Setting
  - Shift Function
  - Analog Output HOLD/CLEAR Setting
  - Disconnection detection function

Item List | Find Result

Setting Item

Item	CH1	CH2	CH3	CH4
Warning Output Function	**Execute the setting related to D/A conversion warning.**			
Warning Output Setting	Disable	Disable	Disable	Disable
Warning output upper limit value	0	0	0	0
Warning output lower limit value	0	0	0	0
Scaling Setting	**Execute the setting related to D/A conversion scaling.**			
Scaling Enable/Disable	Disable	Disable	Disable	Disable
Scaling Upper Limit Value	0	0	0	0
Scaling Lower Limit Value	0	0	0	0
Shift Function	**Execute the setting related to D/A conversion shift function.**			
Shifting amount to conversion value	0	0	0	0
Analog Output HOLD/CLEAR Setting	**Set whether to HOLD the last value or setting value, or to CLEAR the digital value to be converted to analog value.**			
HOLD/CLEAR Setting	Current Value (Hold)	Current Value (Hold)	Current Value (Hold)	Current Value (Hold)
HOLD Setting Value	0	0	0	0
Disconnection detection function	**Execute the setting related to disconnection detection.**			
Disconnection detection enable/disab	Disable	Disable	Disable	Disable
Disconnection recovery detection ena	Disable	Disable	Disable	Disable

Explanation

Execute the setting related to D/A conversion warning.

Check | Restore the Default Settings

Apply

Special Registers

Name	Connection part	Special register			
		CH1	CH2	CH3	CH4
Digital value	1st adapter	SD6300	SD6340	SD6380	SD6420
	2nd adapter	SD6660	SD6700	SD6740	SD6780
	3rd adapter	SD7020	SD7060	SD7100	SD7140
	4th adapter	SD7380	SD7420	SD7460	SD7500
Digital operation value	1st adapter	SD6301	SD6341	SD6381	SD6421
	2nd adapter	SD6661	SD6701	SD6741	SD6781
	3rd adapter	SD7021	SD7061	SD7101	SD7141
	4th adapter	SD7381	SD7421	SD7461	SD7501

FX5-8AD Module

FX5-8AD Specification

- FX5-8AD multiple input module can convert 8 points of analog input values (voltage input, current input, thermocouple and resistance temperature detector) into digital values.
- It is added Right Side to FX5 CPU module (Figure), and is possible to capture voltage/current/thermocouple/resistance temperature detector data of 8 channels.

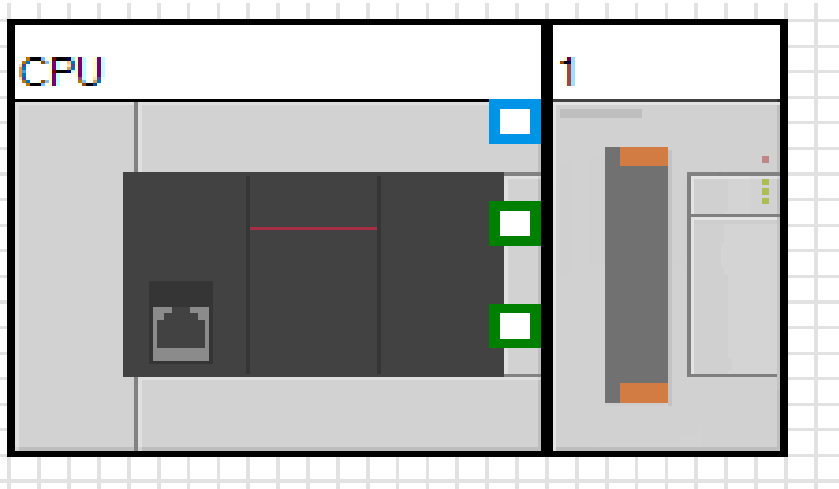

FX5-8AD Specification

Voltage/current input specifications

Items	Specifications			
Analog input voltage	-10 to 10 V DC (Input resistance 1 MΩ)			
Analog input current	-20 to +20 mA DC (Input resistance 250 Ω)			
Digital output value	16-bit signed binary (-32000 to +32000)			
Input characteristics, resolution	Analog input range		Digital output value	Resolution
	Voltage	0 to 10 V	0 to 32000	312.5 μV
		0 to 5 V	0 to 32000	156.25 μV
		1 to 5 V	0 to 32000	125 μV
		-10 to +10 V	-32000 to +32000	312.5 μV
	Current	0 to 20 mA	0 to 32000	625 nA
		4 to 20 mA	0 to 32000	500 nA
		-20 to +20 mA	-32000 to +32000	625 nA
Accuracy (accuracy for the full scale digital output value)	Ambient temperature 25 ± 5 ℃ : within ±0.3% (±192 digits) Ambient temperature -20 to 55 ℃ : within ±0.5% (±320 digits)			
Absolute maximum input	Voltage: ±15 V, Current: ±30 mA			

FX5-8AD Specification

Thermocouple input specifications

Items	Specifications
Usable thermocouple	K, J, T, B, R, S
Resolution	K, J, T: 0.1 ℃ (0.1 to 0.2 ℉) B, R, S: 0.1 to 0.3 ℃ (0.1 to 0.6 ℉)
Temperature measuring range	K: -200 to +1200 ℃ (-328.0 to +2192.0 ℉) J: -40 to +750 ℃ (-40.0 to +1382.0 ℉) T: -200 to +350 ℃ (-328.0 to +662.0 ℉) B: 600 to 1700 ℃ (1112.0 to 3092.0 ℉) R: 0 to 1600 ℃ (32.0 to 2912.0 ℉) S: 0 to 1600 ℃ (32.0 to 2912.0 ℉)
Digital output value (16-bit signed binary)	K: -2000 to +12000 (-3280 to +21920) J: -400 to +7500 (-400 to +13820) T: -2000 to +3500 (-3280 to +6620) B: 6000 to 17000 (11120 to 30920) R: 0 to 16000 (320 to 29120) S: 0 to 16000 (320 to 29120)

FX5-8AD Specification

Resistance temperature detector (RTD) input specifications

Items		Specifications
Usable resistance temperature detector		Pt100, Ni100
Resolution		0.1 ℃ (0.2 ℉)
Temperature measuring range		Pt100: -200 to +850 ℃ (-328 to +1562 ℉) Ni100: -60 to +250 ℃ (-76 to +482 ℉)
Digital output value (16-bit signed binary)		Pt100: -2000 to +8500 (-3280 to +15620) Ni100: -600 to +2500 (-760 to +4820)
Accuracy	Ambient temperature 25±5 ℃	Pt100: ±0.8 ℃ Ni100: ±0.4 ℃
	Ambient temperature -20 to +55 ℃	Pt100: ±2.4 ℃ Ni100: ±1.2 ℃

System Configuration

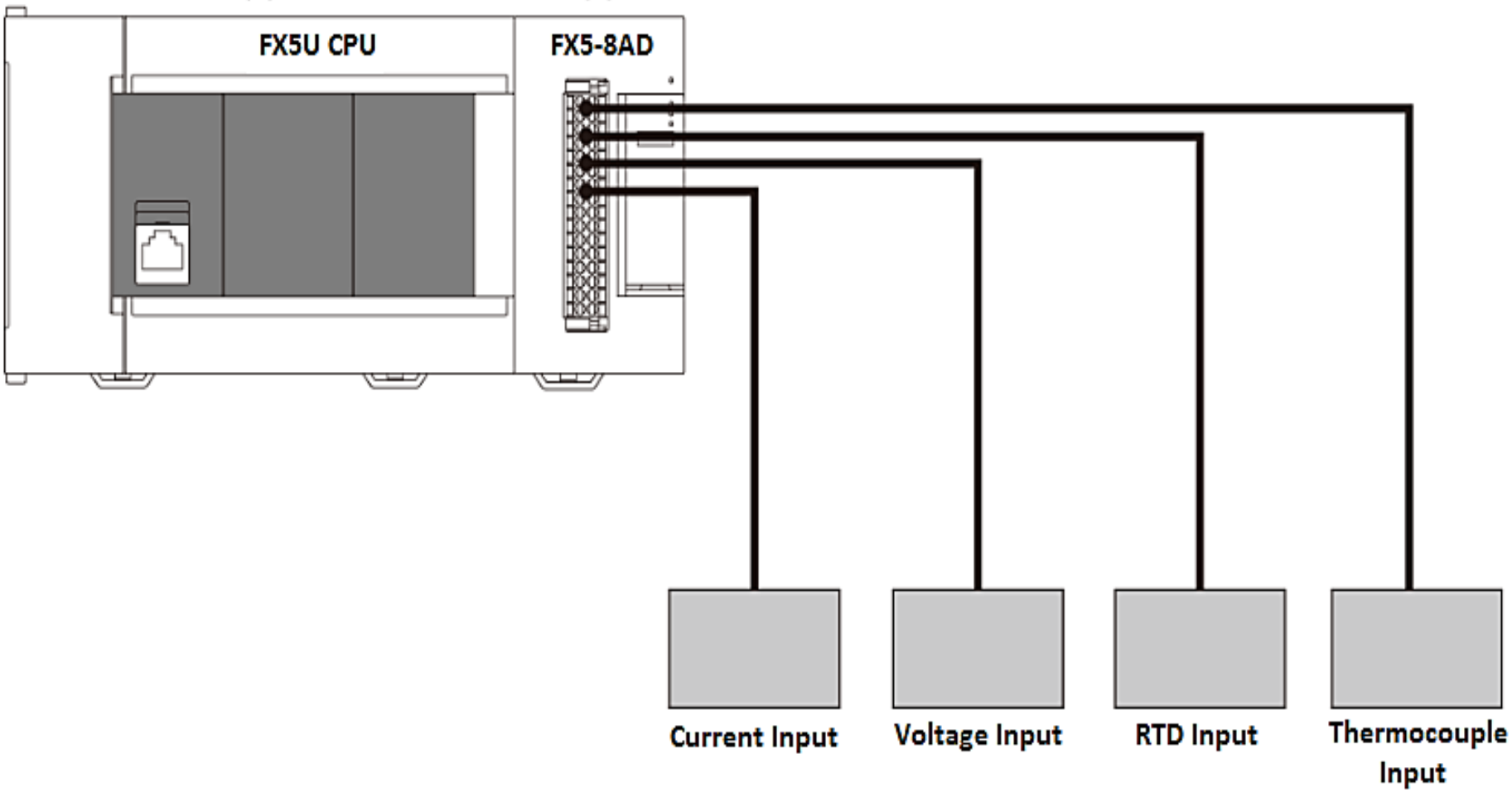

Terminal Wiring

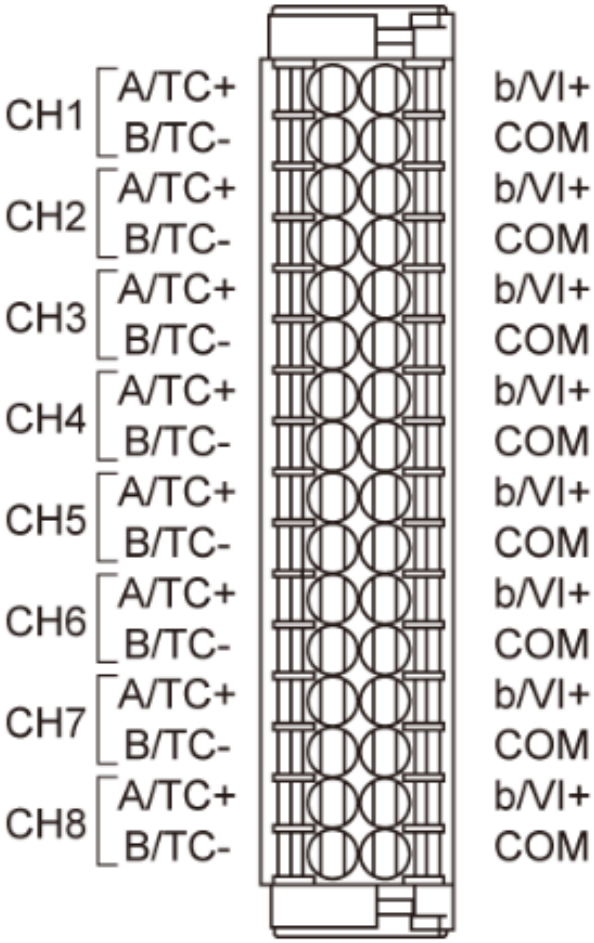

Terminal name		Description
CH1	A/TC+	CH1 Resistance temperature detector input/thermocouple input
	B/TC-	
	b/VI+	CH1 Voltage/current input/resistance temperature detector input
	COM	CH1 Voltage/current input
CH2	A/TC+	CH2 Resistance temperature detector input/thermocouple input
	B/TC-	
	b/VI+	CH2 Voltage/current input/resistance temperature detector input
	COM	CH2 Voltage/current input
CH3	A/TC+	CH3 Resistance temperature detector input/thermocouple input
	B/TC-	
	b/VI+	CH3 Voltage/current input/resistance temperature detector input
	COM	CH3 Voltage/current input
CH4	A/TC+	CH4 Resistance temperature detector input/thermocouple input
	B/TC-	
	b/VI+	CH4 Voltage/current input/resistance temperature detector input
	COM	CH4 Voltage/current input
CH5	A/TC+	CH5 Resistance temperature detector input/thermocouple input
	B/TC-	
	b/VI+	CH5 Voltage/current input/resistance temperature detector input
	COM	CH5 Voltage/current input
CH6	A/TC+	CH6 Resistance temperature detector input/thermocouple input
	B/TC-	
	b/VI+	CH6 Voltage/current input/resistance temperature detector input
	COM	CH6 Voltage/current input
CH7	A/TC+	CH7 Resistance temperature detector input/thermocouple input
	B/TC-	
	b/VI+	CH7 Voltage/current input/resistance temperature detector input
	COM	CH7 Voltage/current input
CH8	A/TC+	CH8 Resistance temperature detector input/thermocouple input
	B/TC-	
	b/VI+	CH8 Voltage/current input/resistance temperature detector input
	COM	CH8 Voltage/current input

Multiple Input Wiring

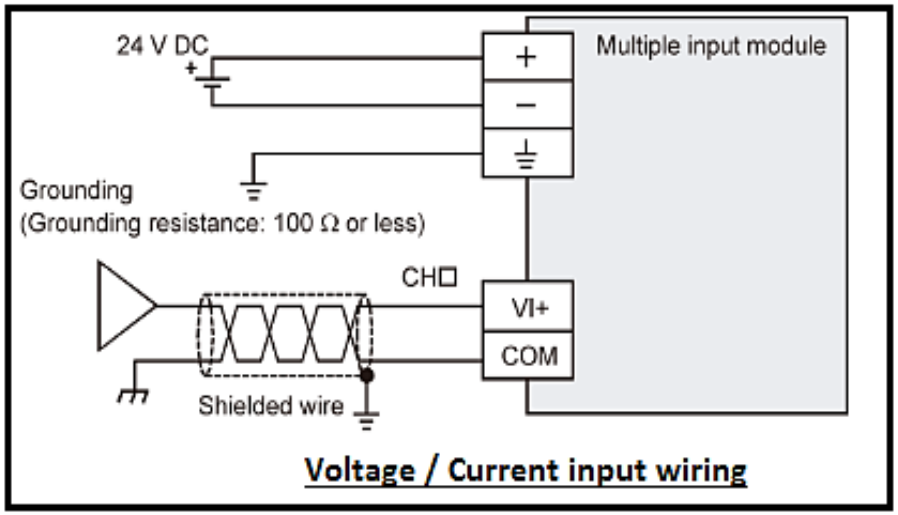

Voltage / Current input wiring

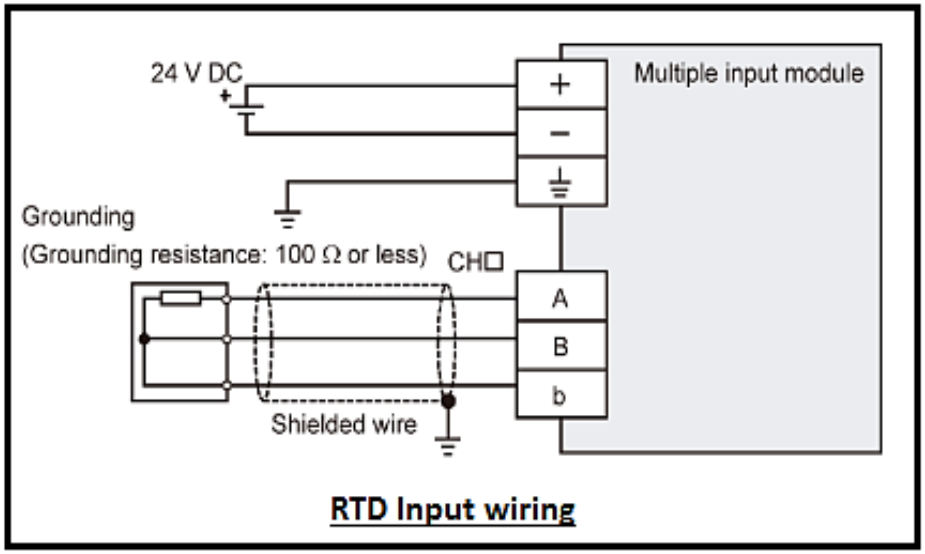

RTD Input wiring

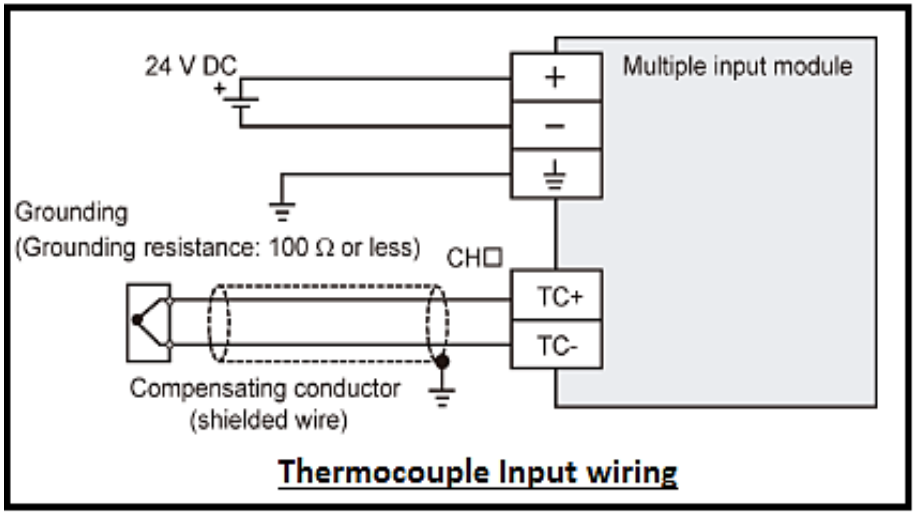

Thermocouple Input wiring

Basic Setting

- Navigation window → [Parameter] → [Module Information] → [FX5-8AD] → [Module Parameter] → "Basic Settings“

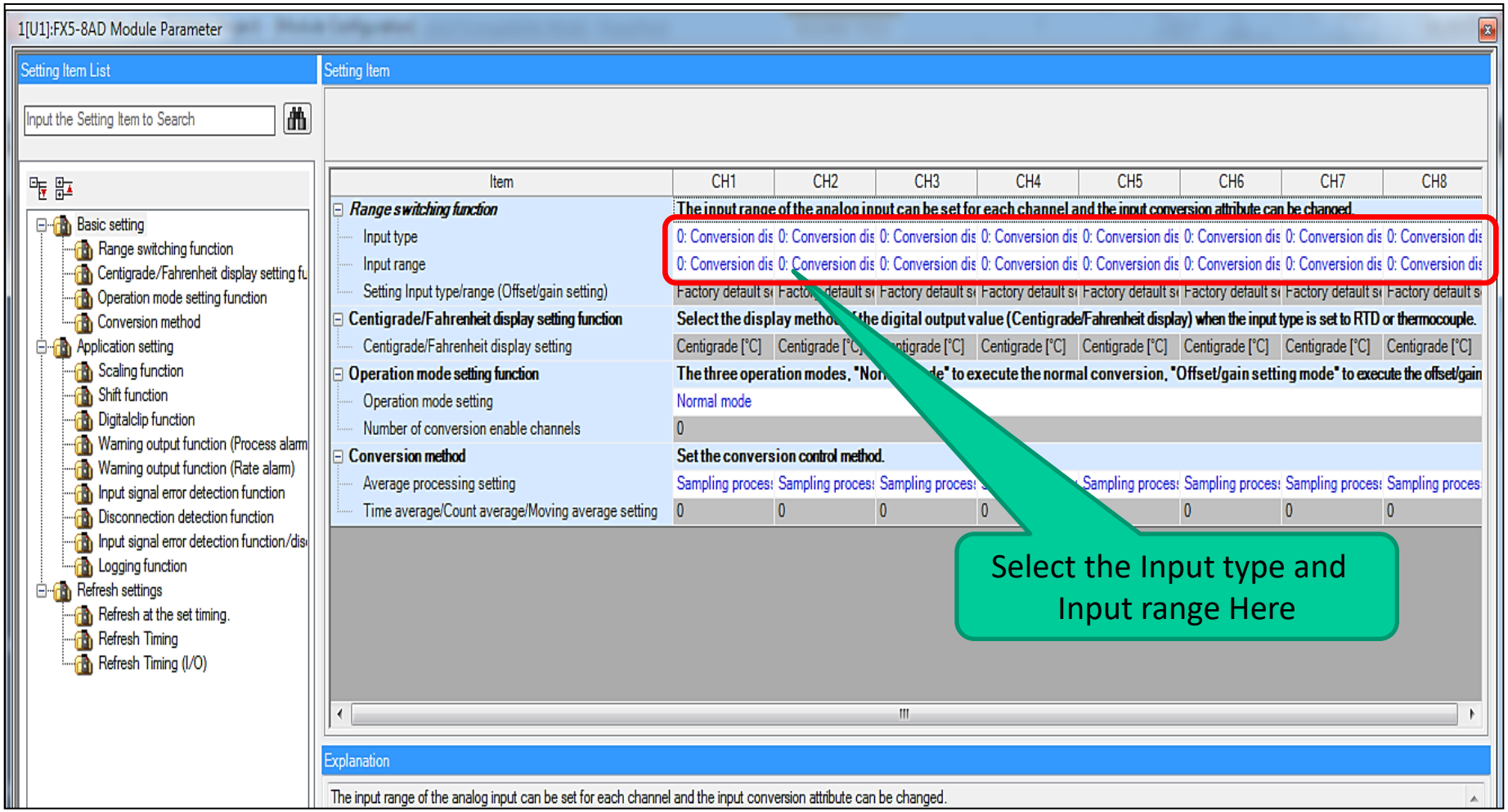

Application Setting

- Navigation window → [Parameter] → [Module Information] → [FX5-8AD] → [Module Parameter] → “Application Settings“

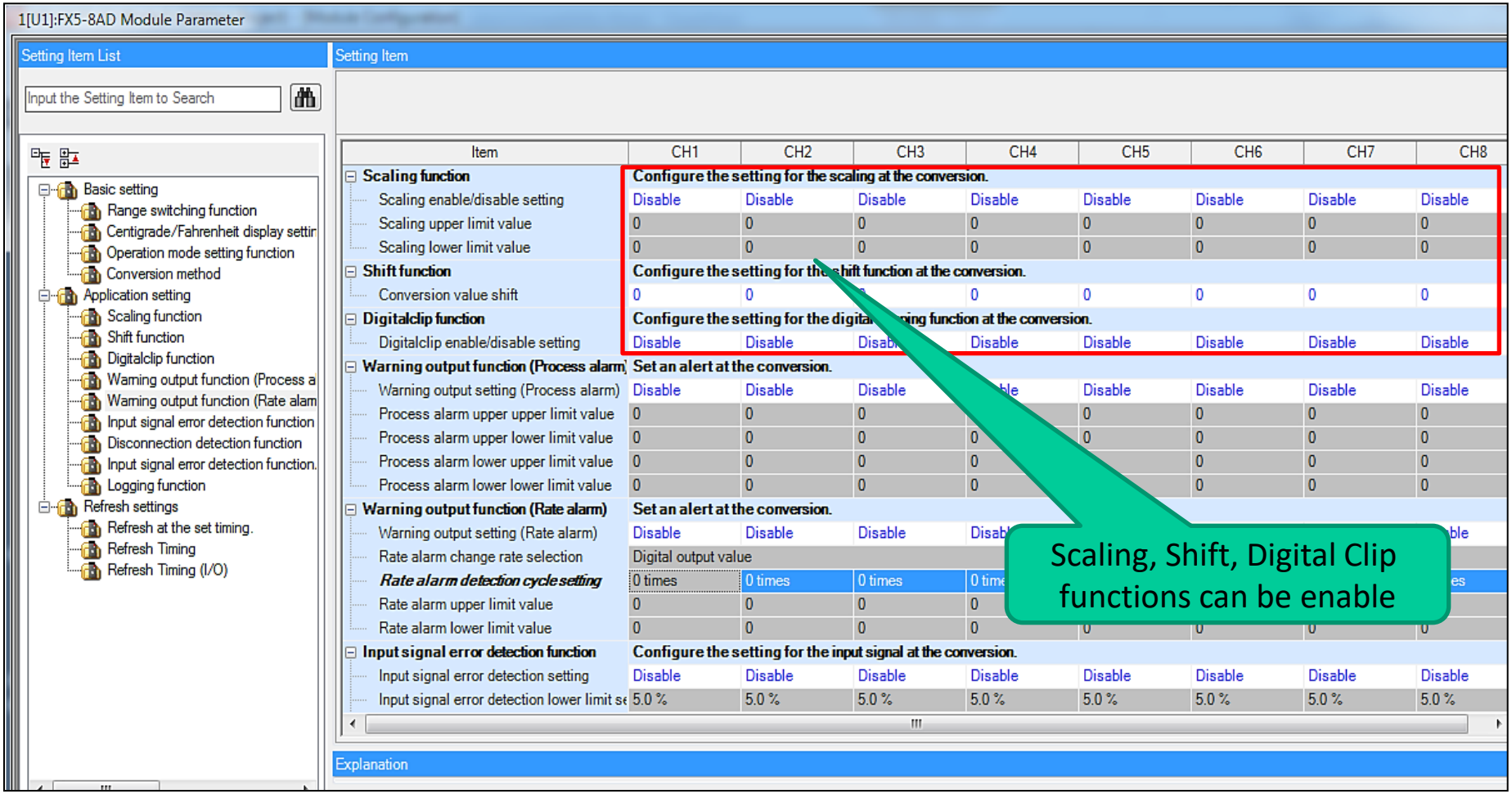

Application Setting
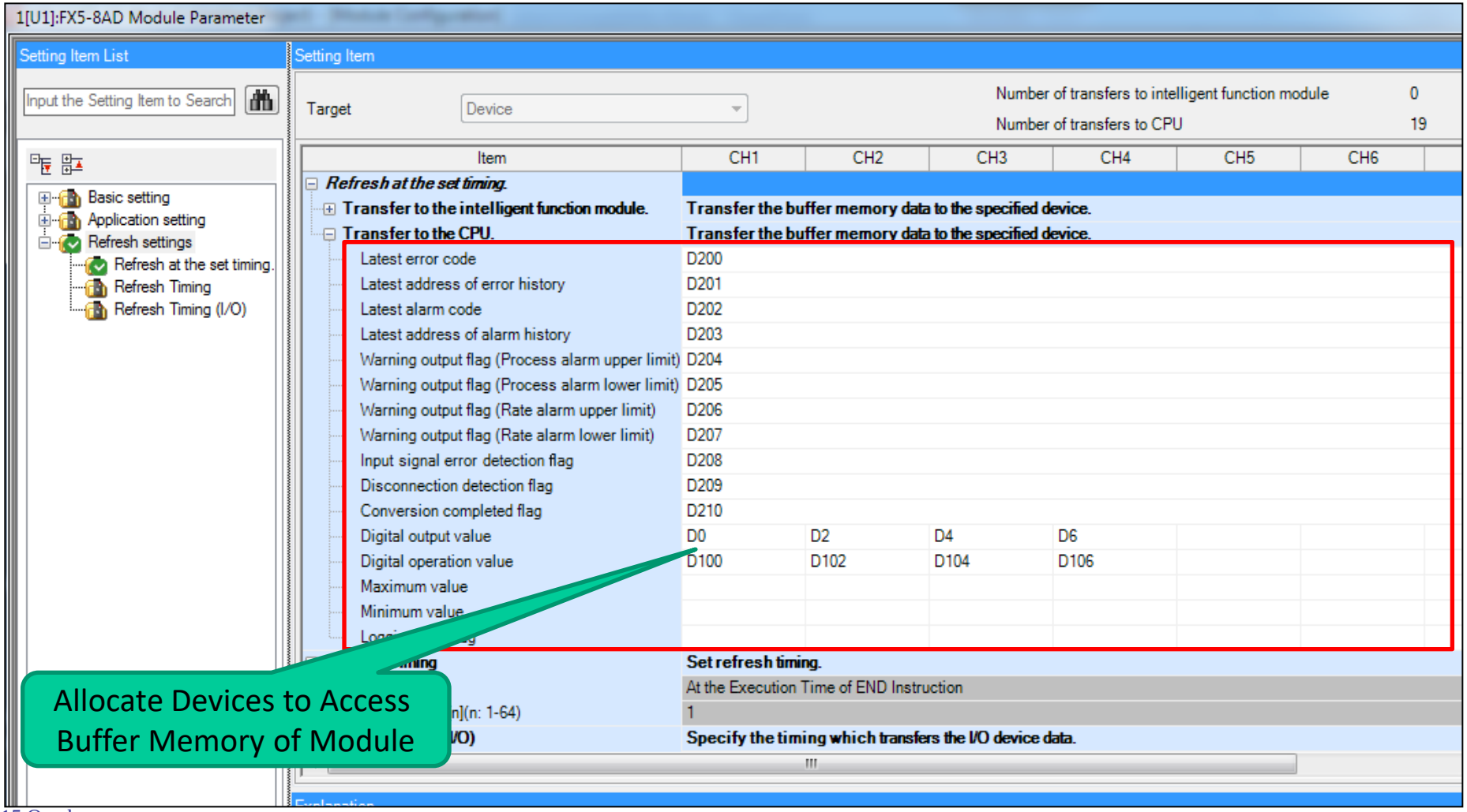
- Navigation window → [Parameter] → [Module Information] → [FX5-8AD] → [Module Parameter] → “Refresh Settings“