MITSUBISHI ELECTRIC
Changes for the Better

for a greener tomorrow

FX5U PLC Hardware

Training Department
Factory Automation Engineering Centre
Factory Automation & Industrial Division
Mitsubishi Electric India Private Limited
FAProduct.Training@mei-india.com

MITSUBISHI ELECTRIC CORPORATION

COPYRIGHT © 2012 MITSUBISHI ELECTRIC CORPORATION. ALL RIGHTS RESERVED.

FX 5 Family of PLCs

MELSEC iQ-F series

FX5U

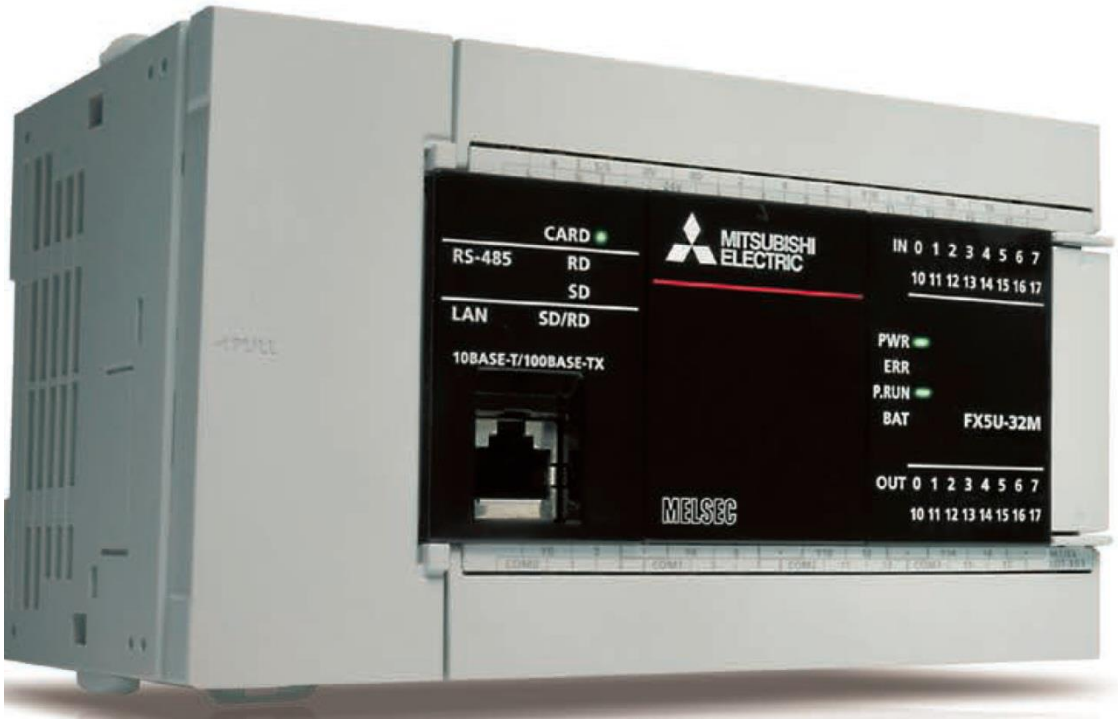

FX5UC

The newly reborn MELSEC iQ-F Series reaches to new areas of application with a high-speed system bus, extensive built-in functions and network support.

FX Generation PLC

Blue arrow: Flow of high function
Orange arrow: Flow of ultra miniaturization

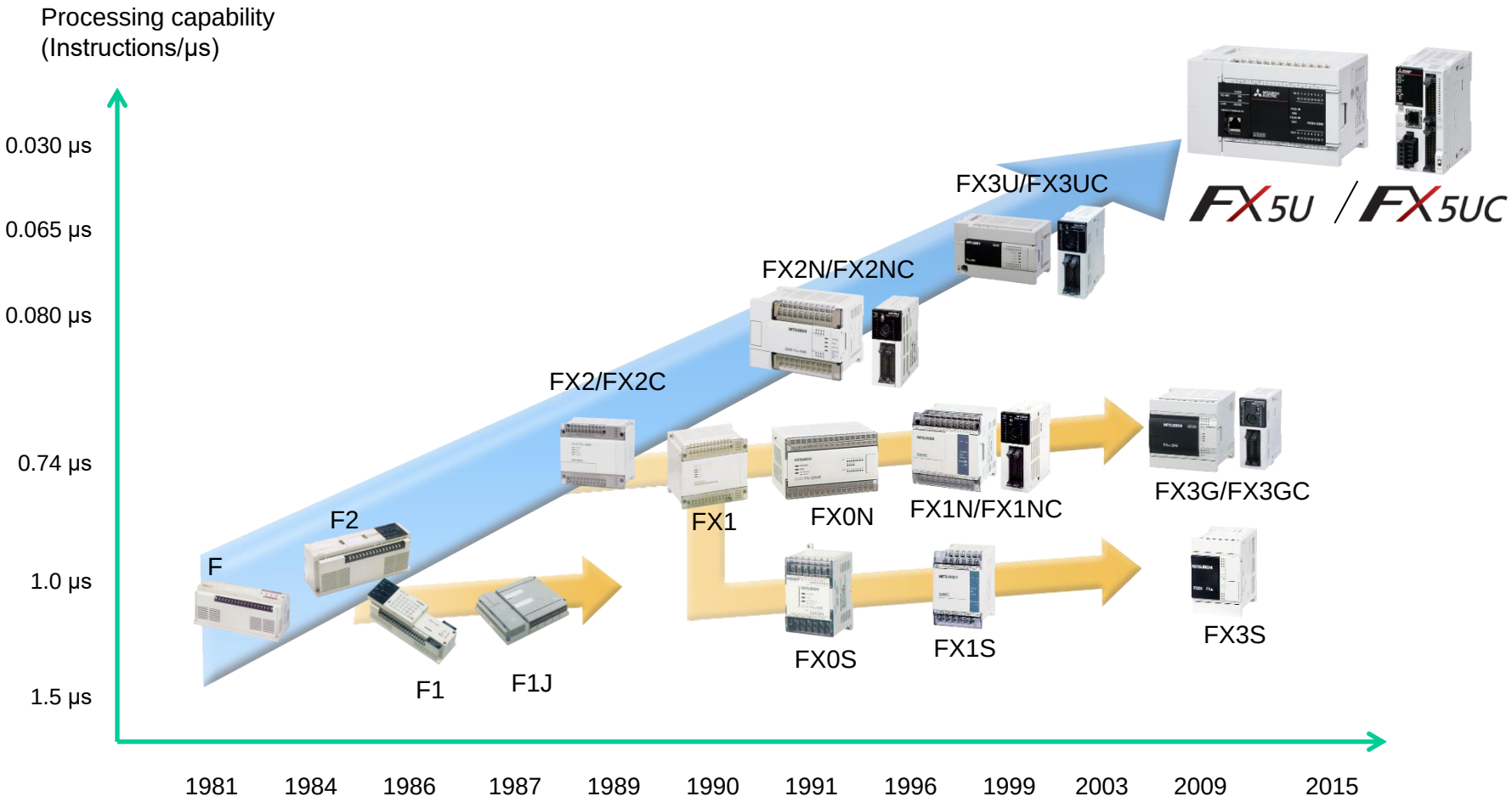

Positioning of MELSEC series

iQ Platform

Function, system scale

MELSEC iQ-R series

MELSEC Q series

MELSEC L series

NEW!

MELSEC iQ-F series

MELSEC-F

Medium to large scale

All-around model with high performance, high function, and multiple line-up that can respond to all types of controls such as motion control, micro computer control, and instrumentation control.

Small to medium scale

General machine that requires cost performance and miniaturization

Small scale

All-in-one ease of use Micro PLC for small scale system

OEL, Semiconductor | Automotive | EMS | Logistics

Expandability

Transportation | New energy | Building | Food | Medicine | Cosmetics

Social infrastructure

General machine
(Packing, food, molding)

FX5U Features

- Improved High-speed system bus
- Extensive built-in functions (e.g. Analog, Ethernet, RS 485/Modbus Communication)
- Enhanced security functions(Password, Security Key etc.)
- Battery-less operation
- Easy built-in positioning (4-axis 200 Kpps)
- Simple interpolation functions
- 4-axis synchronous control with Simple Motion module (dedicated positioning software not needed)
- Easy programming by drag and drop
- Reduced development time with built in module FB

FX5U Features

for a greener tomorrow

CPU performance

Program size	Instruction processing speed (LD, MOV instructions)	Periodic interrupt program	PC MIX
64 k steps	34 ns	Minimum 1 ms	14.6 (instructions/µs)

Built-in analog input/output

2Ch I/P 1 Ch O/P (with Scaling,Shifting,PID function)

Built-in SD card slot

RUN/STOP/RESET switch

Built-in RS-485 port

(MODBUS® function)

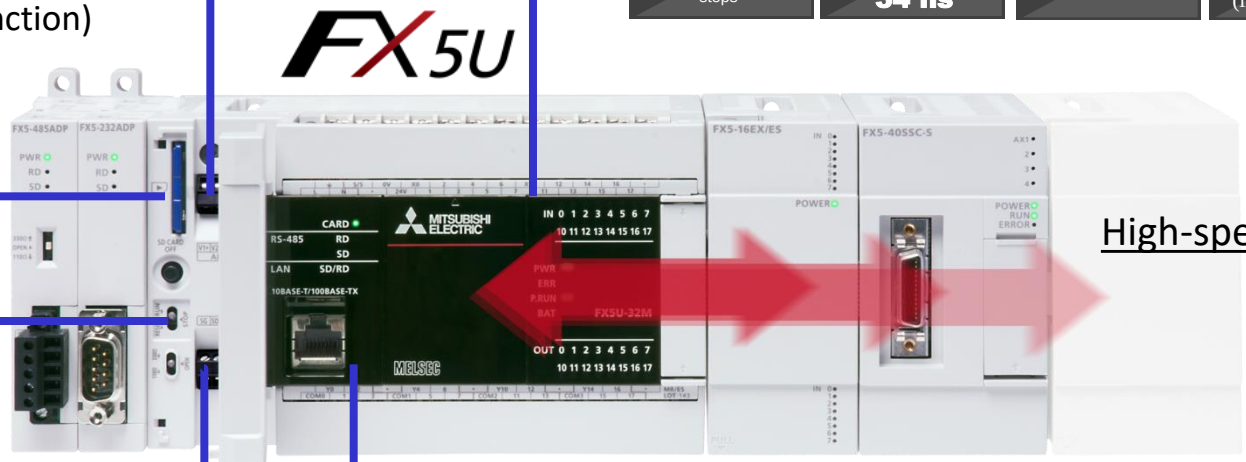

High-speed System bus

Built-in Ethernet port

(Supports MELSOFT Connection, SLMP,Predefined Protocol)

Space Saving Option FX5UC

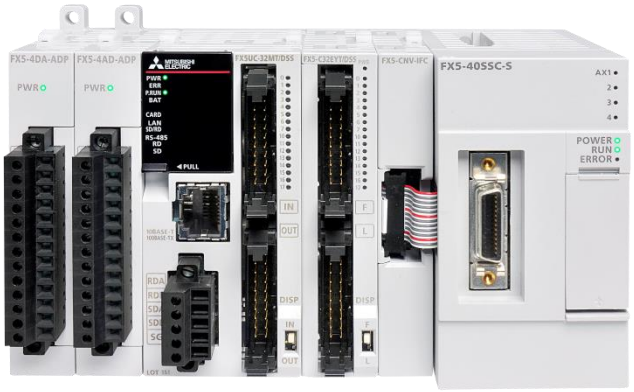

FX5U Features

MAX 16 intelligent modules Up to 512 I/O (including remote I/O)

Built-in Positioning

FX5U/FX5UC features powerful positioning functionality with 8 ch high-speed pulse input and 4-axis pulse output.
Positioning operations including interrupt, variable speed, and simple interpolation can easily be set up in tables and executed.

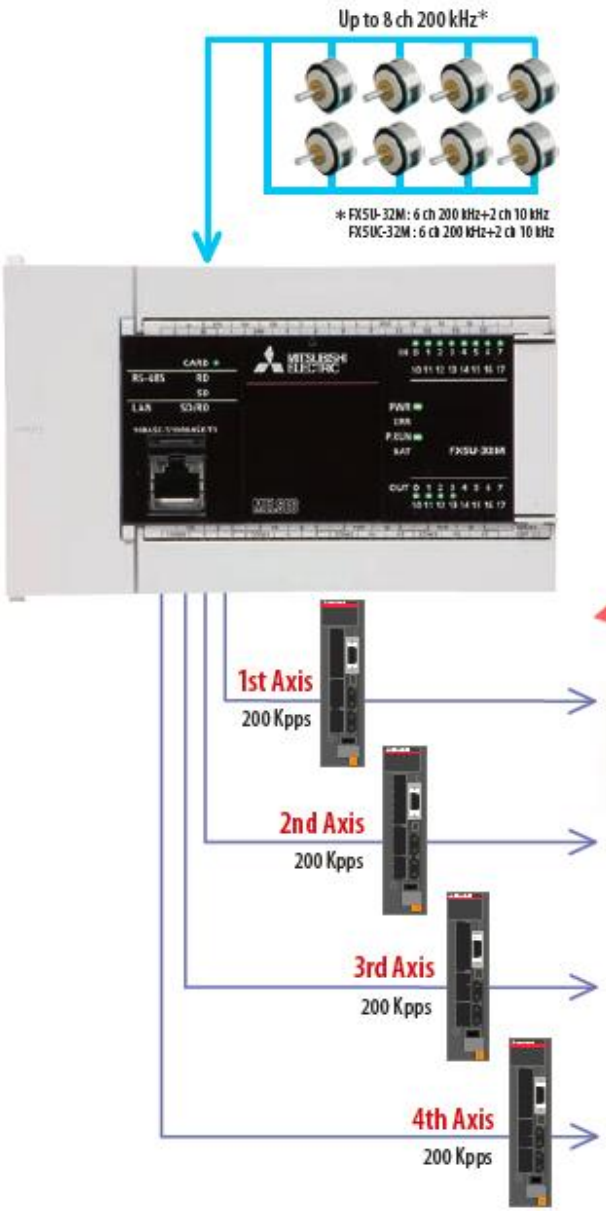

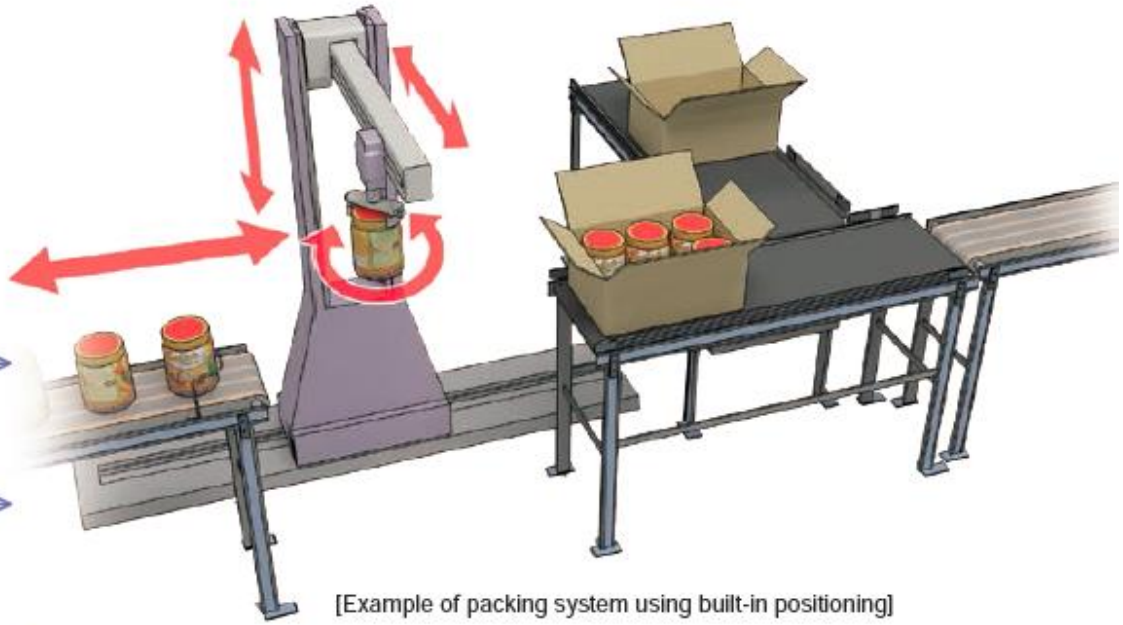

[Example of packing system using built-in positioning]

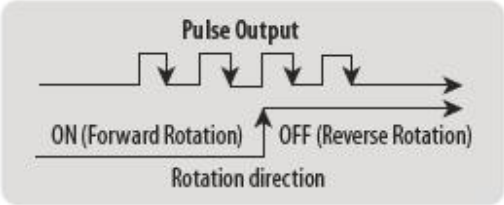

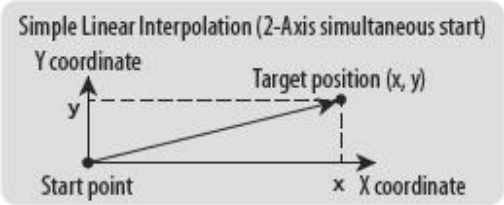

Simple Motion Module

FX5-40SSC-S is equipped with a 4-axis positioning function compatible with SSCNET III/H.

Main Functions

- Linear interpolation
- Circular interpolation
- Continuous trajectory control
- S-curve acceleration/deceleration

Application Examples

- Sealing system
- Automatic vending machines
- Palletizer
- Grinding system

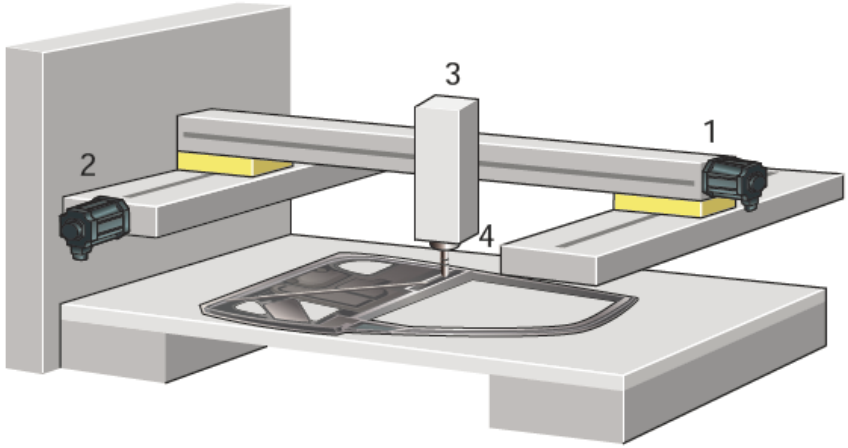

1. X-axis
2. Y-axis
3. Z-axis
4. Paint

FX5-40SSC-S

SSCNET III/H
SERVO SYSTEM CONTROLLER NETWORK

Advanced Motion Control

- Use synchronous control and cam control to build a system perfect for your equipment.
- Register up to 64 types of cam patterns to respond to any type of packaging needs.
- Perform continuous operation without stopping the work piece operation.
- In addition to synchronous control that replaces physical machine mechanisms such as gears, shaft, transmission and cam with software, functions such as cam control, clutch and cam auto-generation are easily realized.
- Up to four axes can be synchronized to the synchronous encoder axis, enabling use with a variety of systems.
- Synchronous control can be started and stopped for each axis

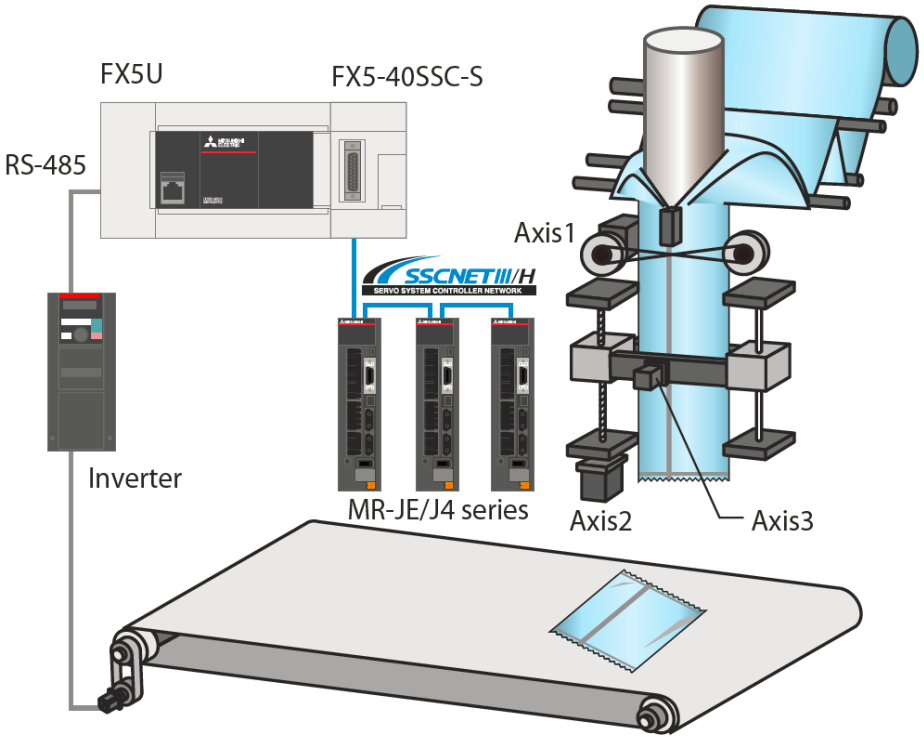

Simple and convenient parameter settings

- MELSEQ iQ-F enables various device settings that
- conventionally had to be programmed can be input in table format.
- Easily set the built-in functions as well as expansion devices just by inputting values into the parameters.
- Program's execution trigger can also be set with the parameters.

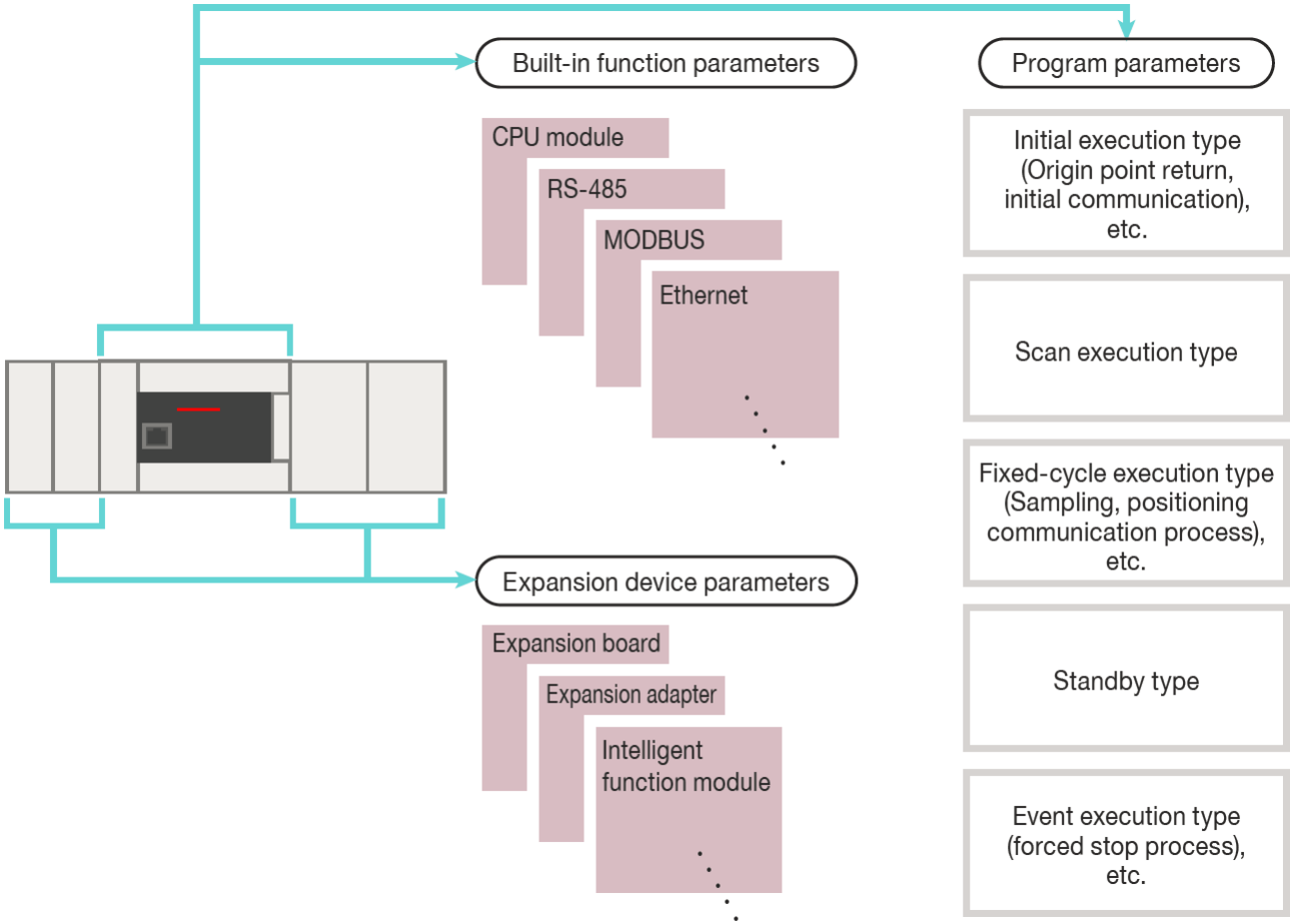

Memory Configuration

- CPU module has 64 k steps of program memory capacity, but the MELSEC iQ-F has a memory data area for each application, so all 64 k steps can be used as the program area.
- Comments and statements can be written freely without affecting the program area.
- Number of characters
  - Comment: 1024 characters
  - Statement: 5000 characters

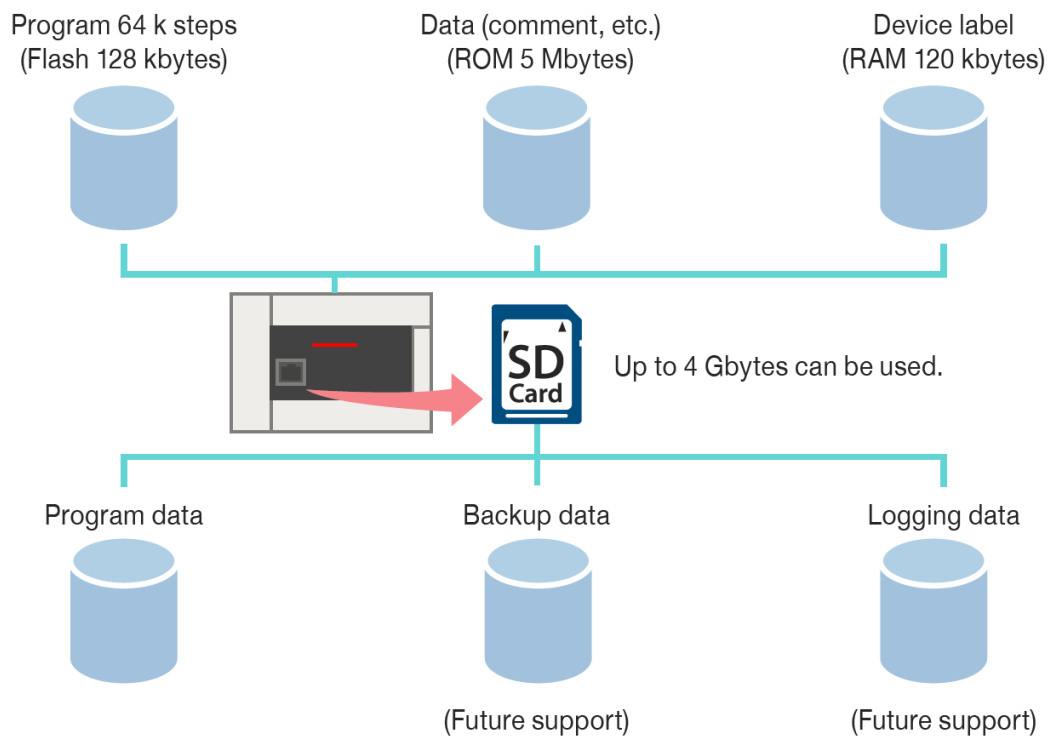

MELSEC iQ-F Series stores the program and devices in non-volatile memory such as Flash ROM, so no battery is required.

Inverter Communication Command

- Built-in Mitsubishi inverter protocol makes it possible to use inverter communication instructions to control a Mitsubishi inverter connected with RS-485 communication.
  - IVCK : Operation monitor
  - IVDR : Operation control
  - IVRD : Parameter read
  - IVWR : Parameter write
  - IVBWR : Parameter batch write
  - IVMC : Multiple command

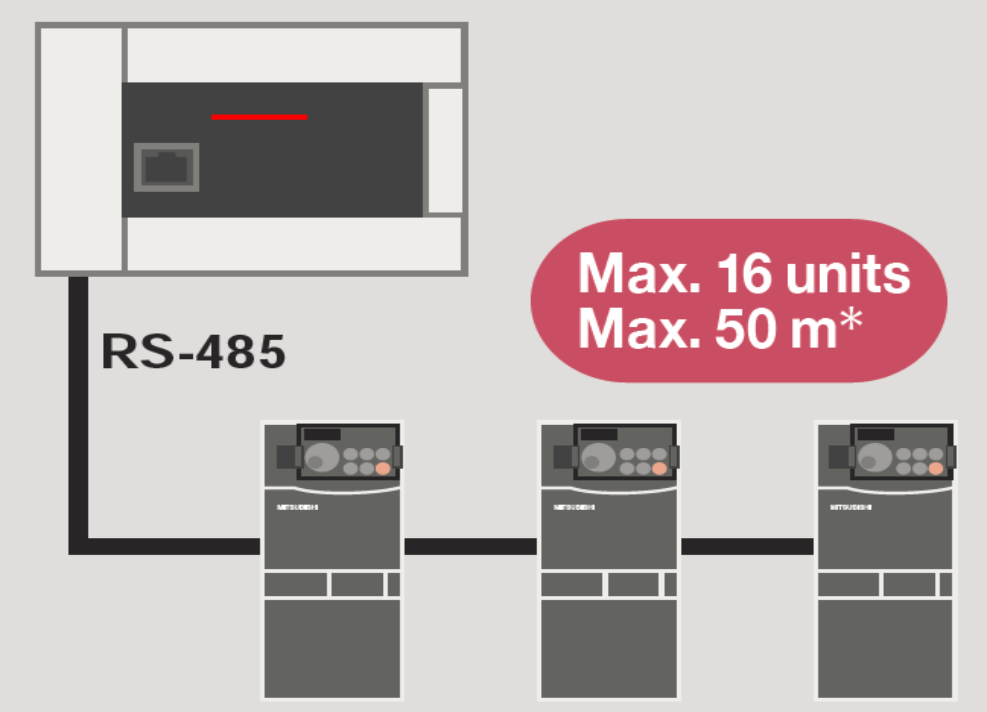

MODBUS Function

- MODBUS function can be used with parameter settings and ADPRW (MODBUS master communication instruction [data read/write.]) Communicate with devices up to 1200 m away using the RS-485 communication adapter.

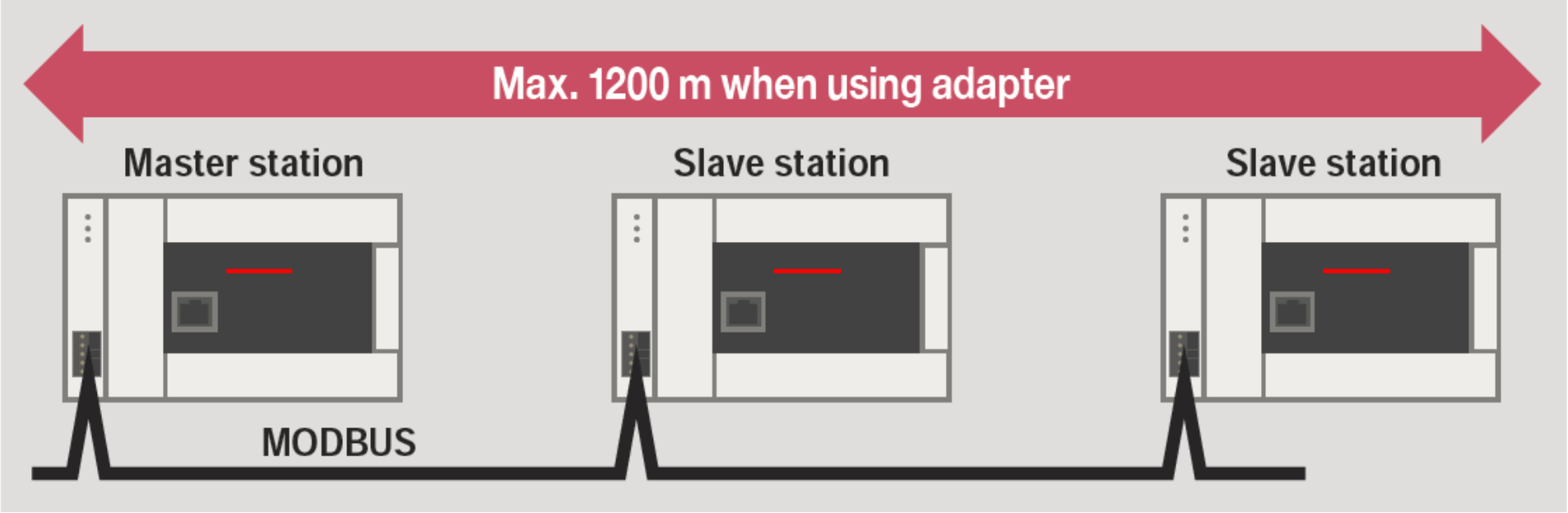

Built-in Ethernet function

- Communication is set with parameters and programs are made with dedicated instructions.

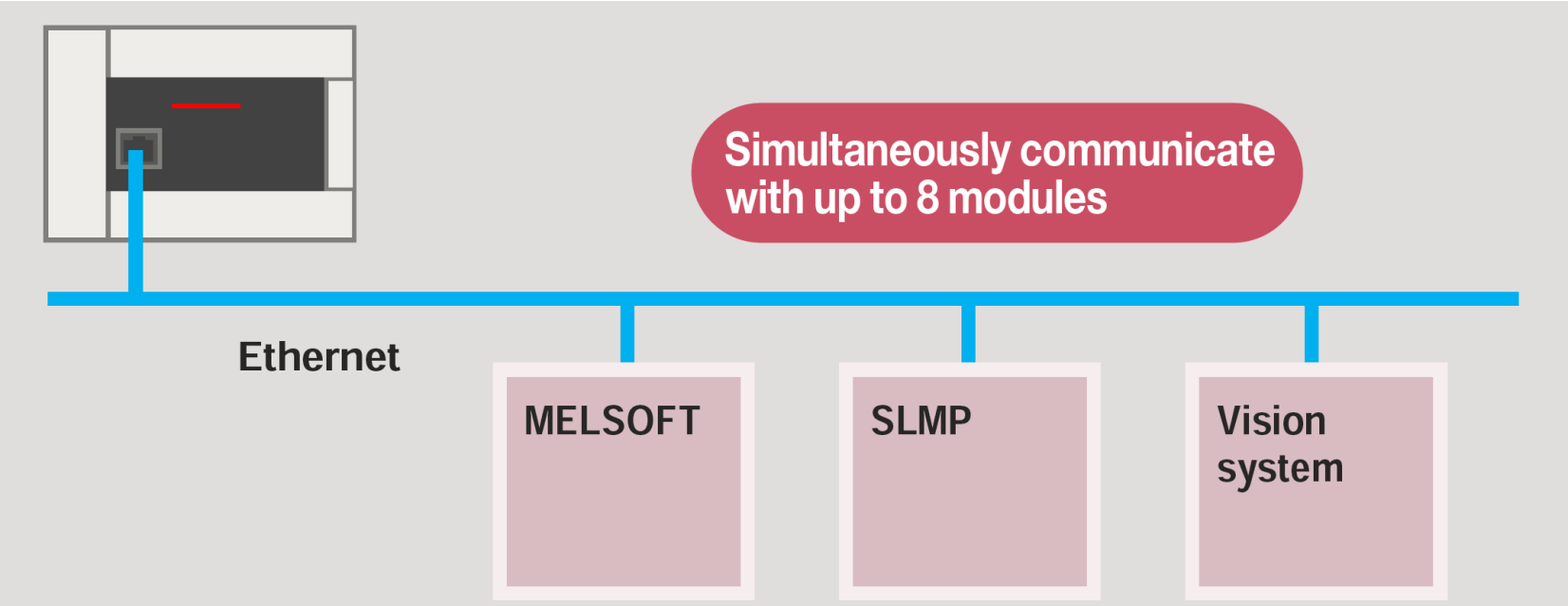

IP Address Change function

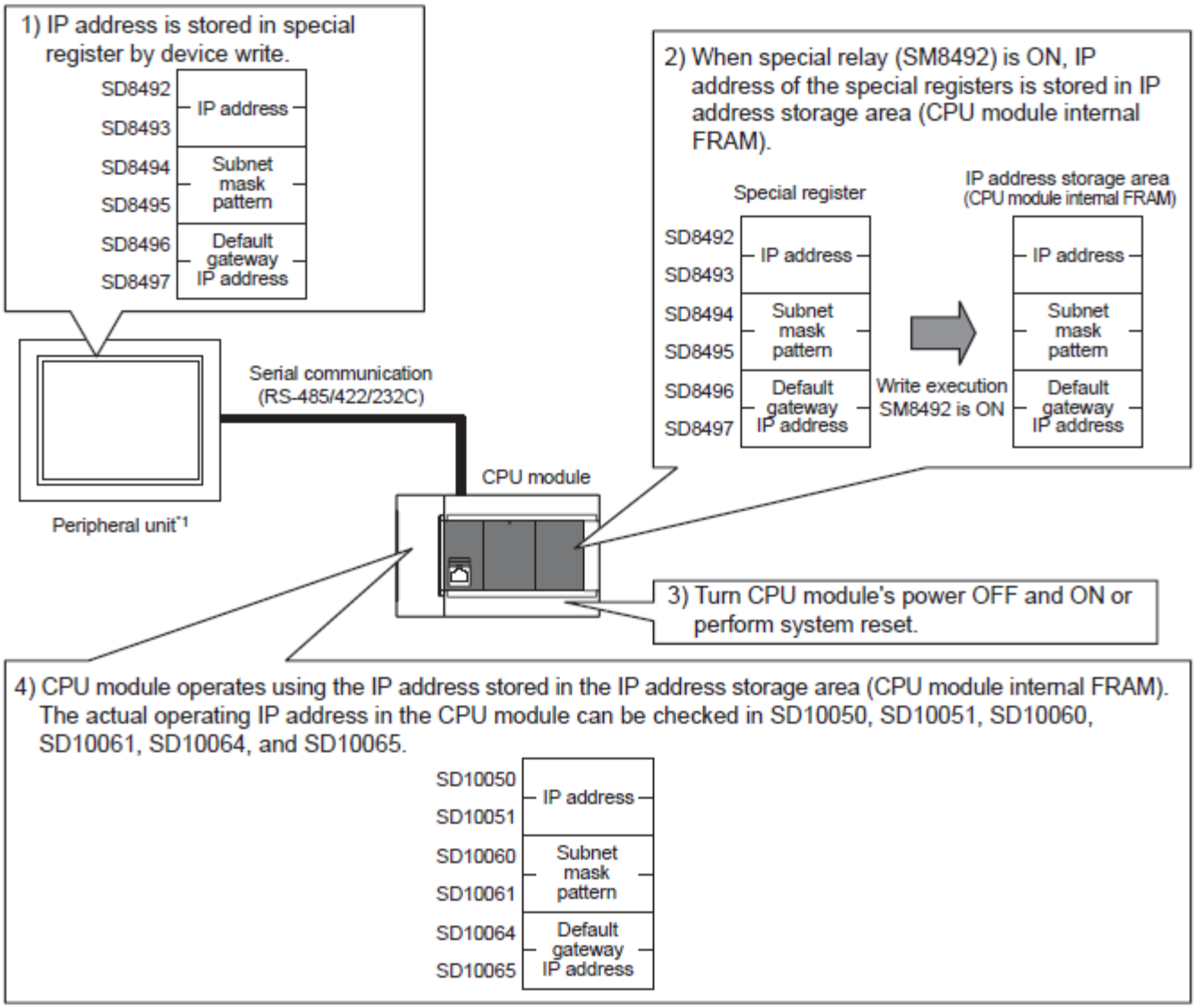

Serial Communication

Supported protocols

- MELSOFT connection
- N:N network
- MC protocol
- Inverter communication
- Non-protocol communication
- Predefined protocol
- Modbus RTU communication

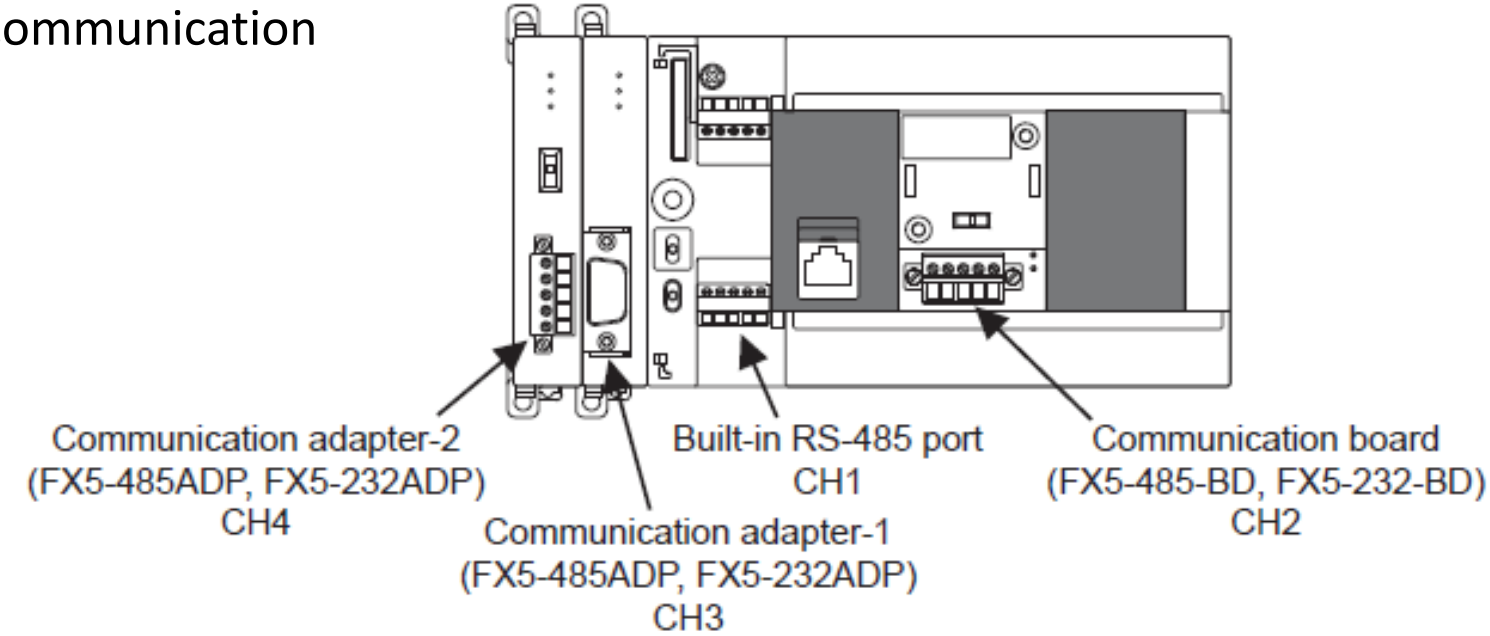

Built-in High-Speed counter function

- Up to four tables can be set for the high-speed comparison table
- Up to 128 tables for the multi-point output high-speed comparison table.
- HCMOV instruction can be used to read the latest values from the special registers.
- Functions
  - Normal mode
  - Pulse density measurement mode
  - Rotation speed measurement mode

FX5U Selection

Adapter

Main Unit

FX5 I/O Module

FX5 Power Supply

FX5 Intelligent Module

FX3 Power Supply

FX3 Intelligent Module

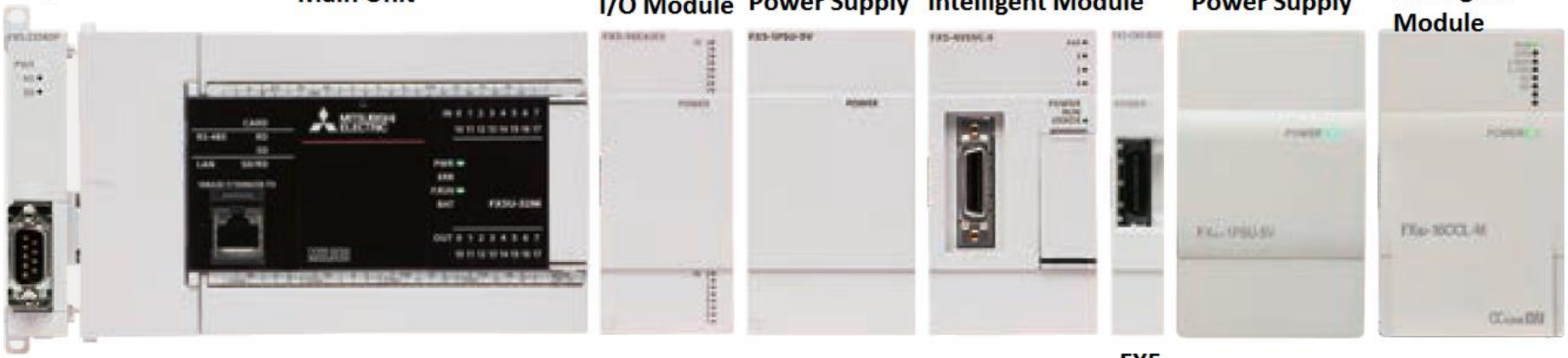

FX5 CNV BUS

Expansion Board

System Configuration

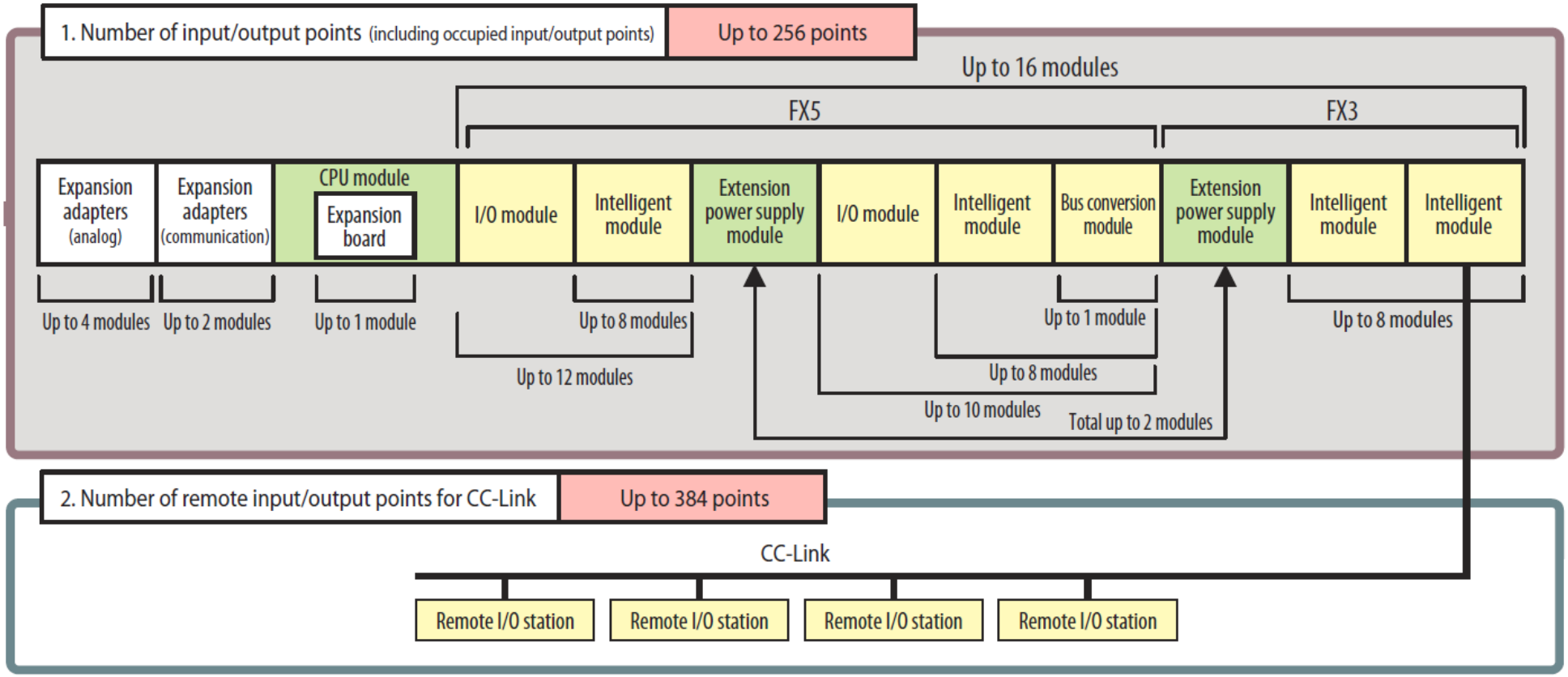

Device Memory

Item			Base	Max. number of points	
No. of user device points	Input relay (X)		8	1024 points	The total number of X and Y assigned to input/output points is up to 256 points.
	Output relay (Y)		8	1024 points	
	Internal relay (M)		10	32768 points (can be changed with parameter)*1	
	Latch relay (L)		10	32768 points (can be changed with parameter)*1	
	Link relay (B)		16	32768 points (can be changed with parameter)*1	
	Annunciator (F)		10	32768 points (can be changed with parameter)*1	
	Link special relay (SB)		16	32768 points (can be changed with parameter)*1	
	Step relay (S)		10	4096 points (fixed)	
	Timer system	Timer (T)	10	1024 points (can be changed with parameter)*1	
	Accumulation timer system	Accumulation timer (ST)	10	1024 points (can be changed with parameter)*1	
	Counter system	Counter (C)	10	1024 points (can be changed with parameter)*1	
		Long counter (LC)	10	1024 points (can be changed with parameter)*1	
	Data register (D)		10	8000 points (can be changed with parameter)*1	
	Link register (W)		16	32768 points (can be changed with parameter)*1	
	Link special register (SW)		16	32768 points (can be changed with parameter)*1	
No. of system device points	Special relay (SM)		10	10000 points (fixed)	
	Special register (SD)		10	12000 points (fixed)	
Module access device	Intelligent function module device		10	65536 points (designated by U[]\G[])	
No. of index register points	Index register (Z)*2		10	24 points	
	Long index register (LZ)*2		10	12 points	
No. of file register points	File register (R)		10	32768 points (can be changed with parameter)*1	
No. of nesting points	Nesting (N)		10	15 points (fixed)	
No. of pointer points	Pointer (P)		10	4096 points	
	Interrupt pointer (I)		10	178 points (fixed)	
Others	Decimal constant (K)	Signed	—	16 bits: -32768 to +32767, 32 bits: -2147483648 to +2147483647	
		Unsigned	—	16 bits: 0 to 65535, 32 bits: 0 to 4294967295	
	Hexadecimal constant (H)		—	16 bits: 0 to FFFF, 32 bits: 0 to FFFFFFFF	
	Real constant (E)	Single precision	—	E-3.40282347+38 to E-1.17549435-38, 0, E1.17549435-38 to E3.40282347+38	
	Character string		—	Shift-JIS code max. 255 single-byte characters (256 including NULL)	

Memory Configuration

- **Fast Memory**
  Capacity: 12k words of data. Holds bit devices, T, ST, C, LC, and D devices.
- **Standard Memory**
  Capacity: 48k words of data. Holds R and W devices.
- **Storage for labels**
  Labels can be allocated to fast memory or standard memory.
- **Internal latch ("Standard latch area")**
  Up to 12k words of data can be latched. Fast memory devices and labels can be latched here.
- **Battery latch**
  When battery is attached, unlimited data can be latched to battery latch area. Standard memory devices and labels can be latched here.

Data Memory

Data memory

The following files are stored in data memory.

Category	File type	Max. number of files	Storage area size	Remarks
Program	Program file	32	1 Mbytes	—
	FB files	16		—
Restored information	Restored information files	48	1 Mbytes	—
Parameters	Parameter files common to system	1	1 Mbytes	—
	CPU parameter file	1		—
	Module parameter file	1		—
	Remote password	1		—
	Global label setting file	1		—
Comments	Device comment file	1	2 Mbytes	—

Program: Maximum 64k steps

Input Wiring Connection

Using Internal Power Supply

Sink input wiring

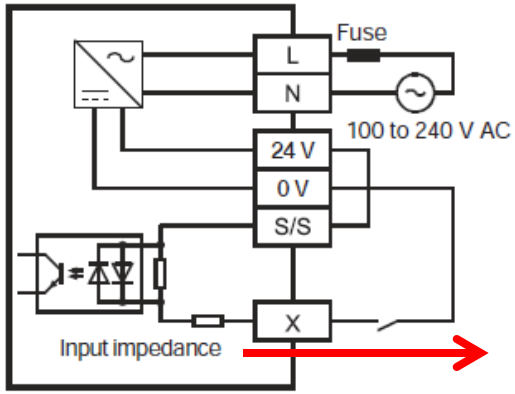

Source input wiring

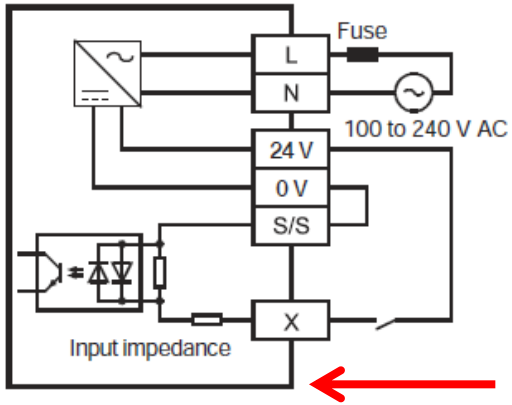

Using External Power Supply

Sink input wiring

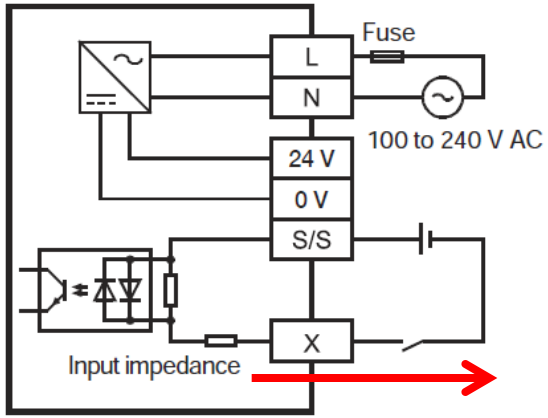

Source input wiring

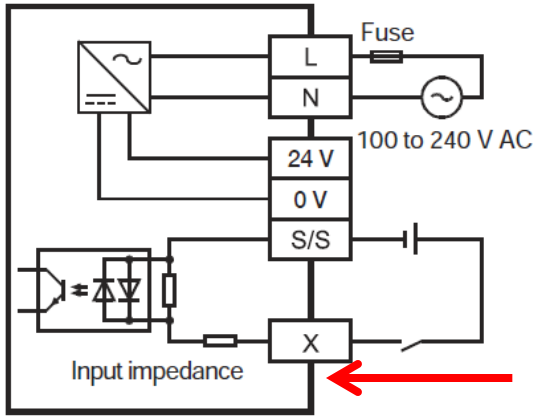

Output Wiring Connection

- Relay Type Output

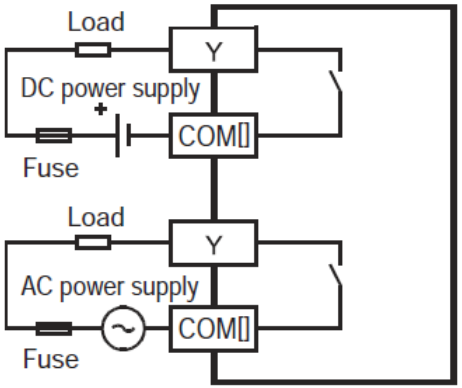

- Transistor Type Output

Sink output wiring

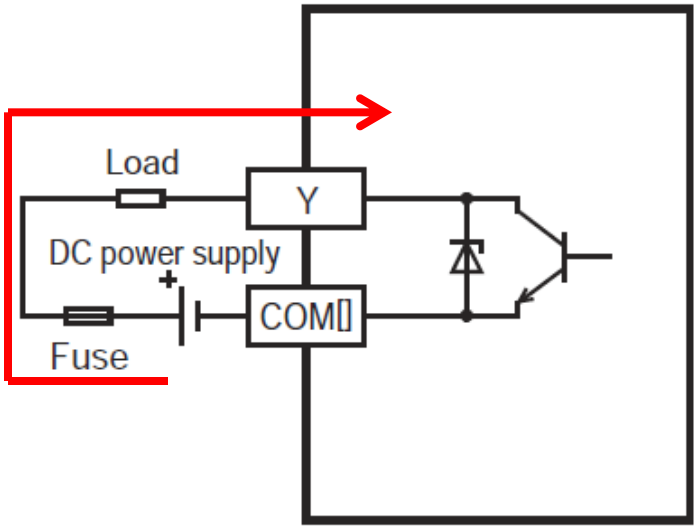

Source output wiring

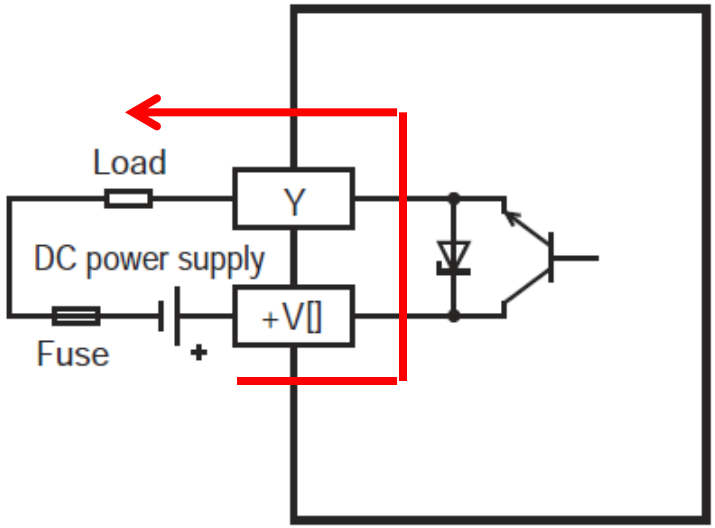

Addressing

- Input/output numbers are octal numbers.
- Input is assigned to "X" and output to "Y.“
- Last digit of the assigned numbers must begin with ‘0’
- Input/output numbers (X/Y) are automatically assigned .
- Input numbers and output numbers following to the preceding device are assigned automatically.
- CPU module automatically assigns numbers (1 to 16) to intelligent function modules or bus conversion module.

Addressing Example

Expansion adapter FX5-232ADP	CPU module FX5UC-32MT/D	Input module FX5-C32EX/D	Input module FX5-C32EYT/D	Bus conversion module FX5-CNV-BUSC	Intelligent module FX3U-1PG	Intelligent module FX3U-4AD

Module No.

No. 1 → No. 2 → No. 3

No addressing Required	**X000-X017**	**X020-X057**				
Expansion adapter FX5-232ADP	CPU module FX5UC-32MT/D	Input module FX5-C32EX/D	Input module FX5-C32EYT/D	Bus conversion module FX5-CNV-BUSC	Intelligent module FX3U-1PG	Intelligent module FX3U-4AD
	Y000-Y017		**Y020-Y057**			
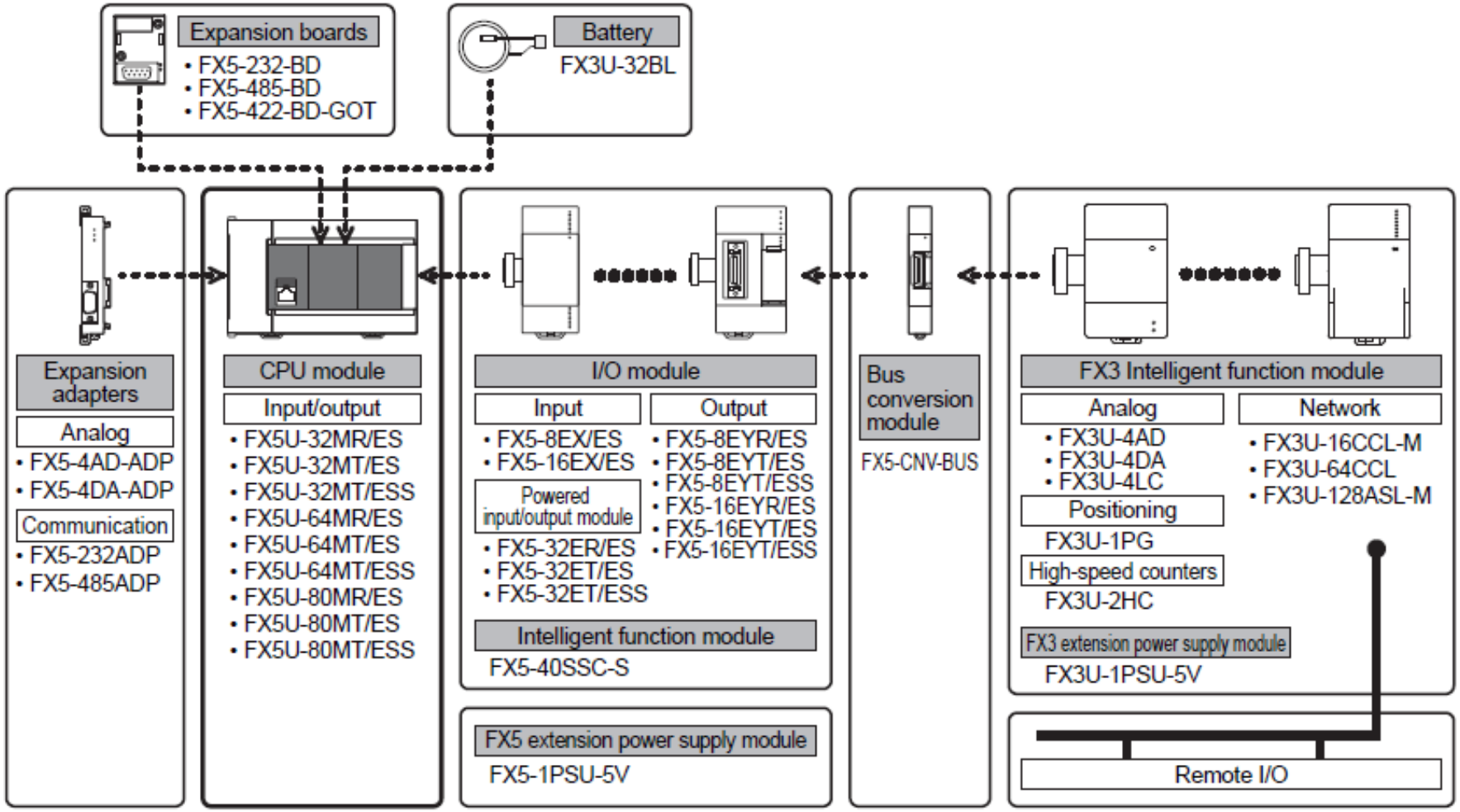
Product List