21EC4012 - ELECTRONIC MEASUREMENTS & INSTRUMENTATION

Module 5: Sensors and Transducers

Electrical Transducer

A transducer is defined as a device that receives energy from one system and transmits it to another, often in a different form.

Broadly defined, the transducer is a device capable of being actuated by an energizing input from one or more transmission media and in turn generating a related signal to one or more transmission systems. It provides a usable output in response to a specified input measurand, which may be a physical or mechanical quantity, property, or conditions. The energy transmitted by these systems may be electrical, mechanical or acoustical.

The nature of electrical output from the transducer depends on the basic principle involved in the design. The output may be analog, digital or frequency modulated.

Basically, there are two types of transducers, electrical, and mechanical.

An electrical transducer is a sensing device by which the physical, mechanical or optical quantity to be measured is transformed directly by a suitable mechanism into an electrical voltage/current proportional to the input measurand.

An electrical transducer must have the following parameters:

- **Linearity:** The relationship between a physical parameter and the resulting electrical signal must be linear.
- **Sensitivity:** This is defined as the electrical output per unit change in the physical parameter (for example V/°C for a temperature sensor). High sensitivity is generally desirable for a transducer.
- **Dynamic Range:** The operating range of the transducer should be wide, to permit its use under a wide range of measurement conditions.
- **Repeatability:** The input/output relationship for a transducer should be predictable over a long period of time. This ensures reliability of operation.
- **Physical Size:** The Electrical Transducer Definition must have minimal weight and volume, so that its presence in the measurement system does not disturb the existing conditions.

Advantages of Electrical Transducer

- Electrical amplification and attenuation can be easily done.
- Mass-inertia effects are minimized.
- Effects of friction are minimized.
- The output can be indicated and recorded remotely at a distance from the sensing medium.
- The output can be modified to meet the requirements of the indicating or controlling units.
- The signal magnitude can be related in terms of the voltage current.
- The signal can be conditioned or mixed to obtain any combination with outputs of similar transducers or control signals.
- The electrical or electronic system can be controlled with a very small power level.
- The electrical output can be easily used, transmitted and processed for the purpose of measurement.

Classification

Electrical transducer can be broadly classified into two major categories:

- Active transducer
- Passive transducer

In active transducer generates an electrical signal directly in response to the physical parameter and does not require an external power source for its operation. Active transducers are self generating devices, which operate under energy conversion principle and generate an equivalent output signal (for example from pressure to charge or temperature to electrical potential).

Typical example of active transducers are piezo electric sensors (for generation of charge corresponding to pressure) and photo voltaic cells (for generation of voltage in response to illumination).

Passive transducer operate under energy controlling principles, which makes it necessary to use an external electrical source with them. They depend upon the change in an electrical parameter (R, L and C).

Typical example are strain gauges (for resistance change in response to pressure), and thermistors (for resistance change corresponding to temperature variations).

Electrical transducer are used mostly to measure non-electrical quantities. For this purpose a detector or sensing element is used, which converts the physical quantity into a displacement. This displacement actuates an electric transducer, which acts as a secondary transducer and give an output that is electrical in nature. This electrical quantity is measured by the standard method used for electrical measurement. The electrical signals may be current, voltage, or frequency; their production is based on R, L and C effects.

A transducer which converts a non-electrical quantity into an analog electrical signal may be considered as consisting of two parts, the sensing element, and the transduction element.

The sensing or detector element is that part of a transducer which responds to a physical phenomenon or to a change in a physical phenomenon. The response of the sensing element must be closely related to the physical phenomenon.

The transduction element transforms the output of a sensing element to an electrical output. This, in a way, acts as a secondary transducer.

Transducers may be further classified into different categories depending upon the principle employed by their transduction elements to convert physical phenomena into output electrical signals.

The different electrical phenomena employed in the transduction elements of transducers are as follows.

1. Resistive
2. Photo-emissive
3. Inductive
4. Photo-resistive
5. Capacitive
6. Potentiometric
7. Electro magnetic
8. Thermo-electric
9. Piezo-electric
10. Frequency generating

Selecting a Transducer

The transducer or sensor has to be physically compatible with its intended application. The following should be considered while selecting a transducer.

1. Operating range: Chosen to maintain range requirements and good resolution.
2. Sensitivity: Chosen to allow sufficient output.
3. Frequency response and resonant frequency: Flat over the entire desired range.
4. Environmental compatibility: Temperature range, corrosive fluids, pressure, shocks, interaction, size and mounting restrictions.
5. Minimum sensitivity: To expected stimulus, other than the measurand.
6. Accuracy: Repeatability and calibration errors as well as errors expected due to sensitivity to other stimuli.

7. Usage and ruggedness: Ruggedness, both of mechanical and electrical intensities versus size and weight.

8. Electrical parameters: Length and type of cable required, signal to noise ratio when combined with amplifiers, and frequency response limitations.

Resistive Transducer — Resistive Potentiometer — Resistance Pressure Transducer

Resistive Transducer are those in which the resistance changes due to a change in some physical phenomenon. The change in the value of the resistance with a change in the length of the conductor can be used to measure displacement.

Strain gauges work on the principle that the resistance of a conductor or semiconductor changes when strained. This can be used for the measurement of displacement, force and pressure.

The resistivity of materials changes with changes in temperature. This property can be used for the measurement of temperature.

Resistive Potentiometer

A resistive potentiometer (pot) consists of a resistance element provided with a sliding contact, called a wiper. The motion of the sliding contact may be translatory or rotational. Some have a combination of both, with resistive elements in the form of a helix, as shown in Fig. 13.1(c). They are known as helipots.

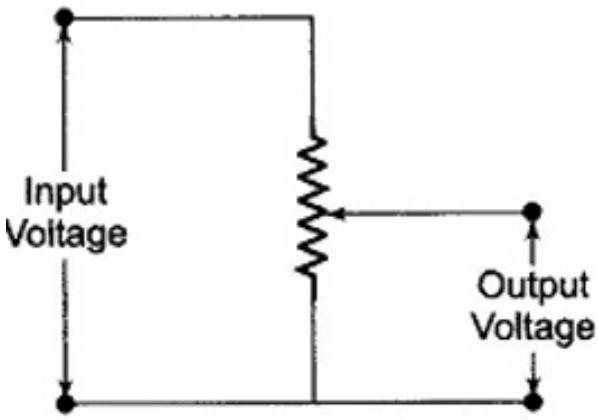

Figure 1: Translatory Type

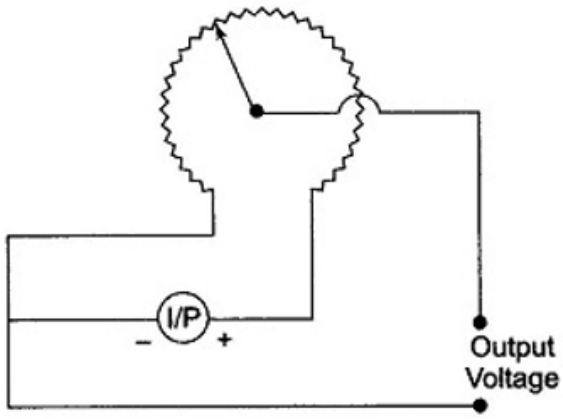

Figure 2: Rotational Type

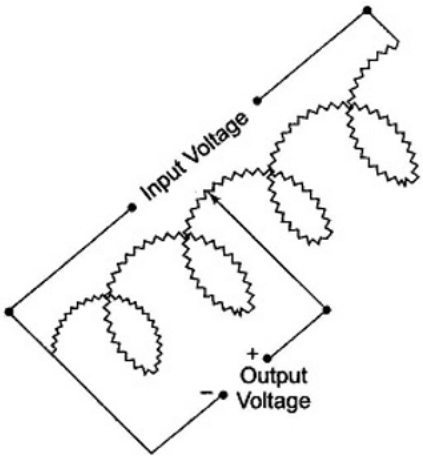

Figure 3: Helipot

Translatory resistive elements are linear (straight) devices. Rotational resistive devices are circular and are used for the measurement of angular displacement

Helical resistive elements are multi turn rotational devices which can be used for the measurement of either translatory or rotational motion. A potentiometer is a passive transducer since it requires an external power source for its operation.

Advantage of Potentiometers:

1. They are inexpensive.
2. Simple to operate and are very useful for applications where the requirements are not particularly severe.
3. They are useful for the measurement of large amplitudes of displacement.
4. Electrical efficiency is very high, and they provide sufficient output to allow control operations.

Disadvantages of Potentiometers:

1. When using a linear potentiometer, a large force is required to move the sliding contacts.
2. The sliding contacts can wear out, become misaligned and generate noise.

Resistance Pressure Transducer

Measurement in the resistive type of transducer is based on the fact that a change in pressure results in a resistance change in the sensing elements. Resistance pressure transducers are of two main types. First, the electromechanical resistance transducer, in which a change of pressure, stress, position, displacement or other mechanical variation is applied to a variable. The other resistance transducer is the strain gauge, where the stress acts directly on the resistance. It is very commonly used for stress and displacement measurement in instrumentation.

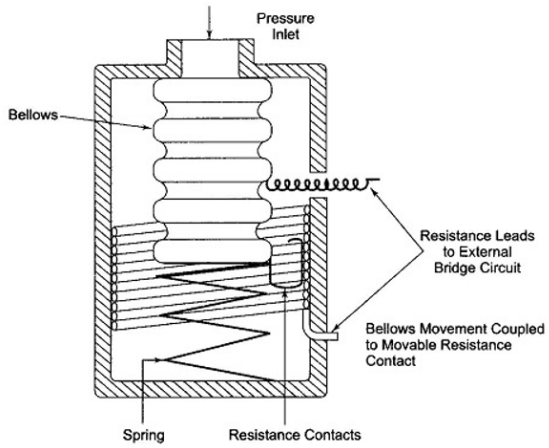

Figure 4: Resistance Pressure Transducer

In the general case of pressure measurement, the sensitive resistance element may take other forms, depending on the mechanical arrangement on which the pressure is caused to act.

Two ways by which the pressure acts to influence the sensitive resistance element, i.e. by which pressure varies the resistance. They are the bellow type, and the diaphragm type. (Yet another is the Bourdon tube of pressure gauge).

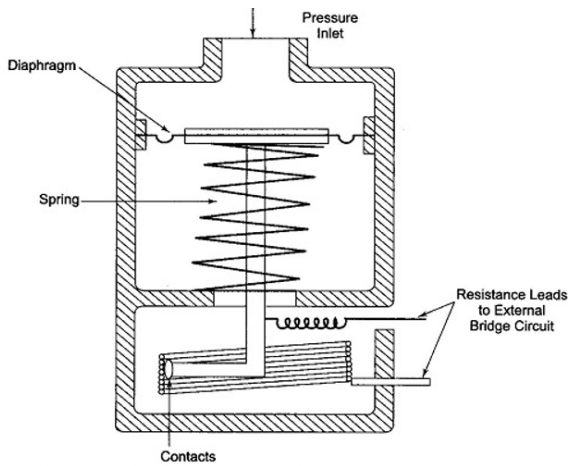

Figure 5: Sensitive Diaphragam Moves the Resistance Contact

In each of these cases, the element moved by the pressure change is made to cause a change in resistance. This resistance change can be made part of a bridge circuit and

then taken as either ac or dc output signal to determine the pressure indication.

Capacitive Pressure Transducer Working Principle

Capacitive Pressure Transducer Working Principle – A linear change in capacitance with changes in the physical position of the moving element may be used to provide an electrical indication of the element's position.

The capacitance is given by:

$$C = \frac{KA}{d}$$

where:

- K = the dielectric constant
- A = the total area of the capacitor surfaces
- d = distance between two capacitive surfaces
- C = the resultant capacitance

Capacitance increases if the effective area of the plate is increased or if the material has a high dielectric constant. Capacitance is reduced if the spacing between the plates is increased.

With proper calibration, each type yields a high degree of accuracy. Stray magnetic and capacitive effects may cause errors in the measurement, which can be avoided by proper shielding. Some capacitive dielectrics are temperature sensitive, so temperature variations should be minimized for accurate measurements.

A variable plate area transducer consists of a fixed plate called *Stator* and a movable plate called the *Rotor*.

The rotor is mechanically coupled to the member under test. As the member moves, the rotor changes its position relative to the stator, thereby changing the effective area between the plates. Such a device is used to detect the amount of roll in an aircraft.

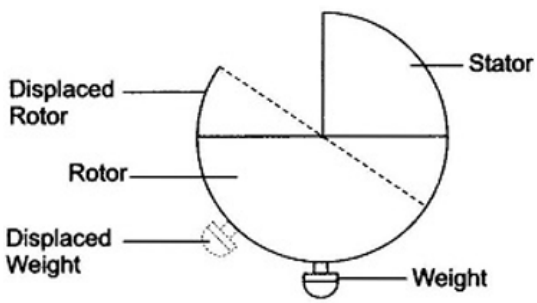

Figure 6: Capacitive Transducer

A transducer that makes use of the variation in capacitance resulting from a change in spacing between the plates. This particular transducer is designed to measure pressure (in vacuum).

A metallic diaphragm inside an airtight container moves depending on pressure changes, which alters the distance to a stationary plate. The resulting change in capacitance is used to indicate the pressure.

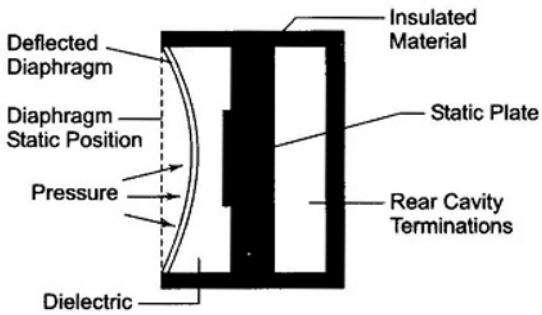

Figure 7: Capacitive Pressure Transducer

This device is not linear. Changes in pressure may be detected by variation in capacity between fixed and movable plates.

Basic capacitance formula:

$$C = \frac{KnA}{t}$$

where:

- A = area of one side of one plate in cm^2
- n = number of plates
- t = thickness of dielectric in cm
- K = dielectric constant

This principle is simple to construct and cost-effective. However, high impedance output necessitates shielding and compensation, and often complex design.

Pressure Inductive Transducer

Pressure Inductive Transducer – A simple arrangement, wherein a change in the inductance of a sensing element is produced by a pressure change, is given in Fig. 13.22.

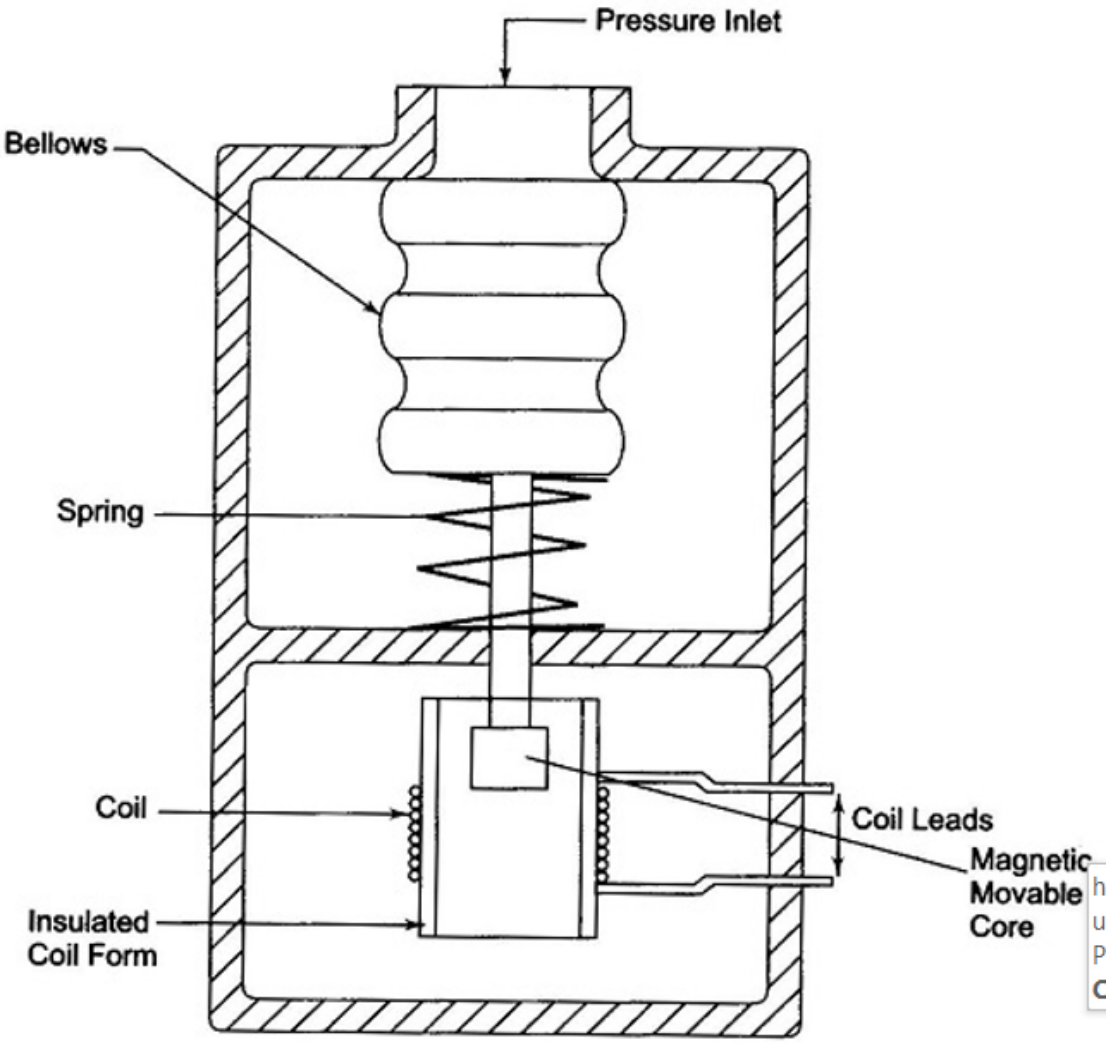

Figure 8: Pressure Inductive Transducer

Here the pressure acting on a movable magnetic core causes an increase in the coil inductance corresponding to the acting pressure. The change in inductance can again be made on the basis of an electrical signal, using an AC bridge.

An advantage of the Pressure Inductive Transducer type over the resistive type is that no moving contacts are present, thereby providing continuous resolution of the change, with no extra friction load imposed on the measuring system.

In a slightly modified form, this principle is used to obtain a change in mutual inductance between magnetically coupled coils, rather than in the self inductance of a single coil. When a change in an induced voltage is involved, the transducer is sometimes called a variable reluctance sensor or magnetic pickup. A very important example of the mutual type is the LVDT.

1. Inductive Position Transducers (Synchros)

Synchro's is a generic name for a faculty of Pressure Inductive Transducer devices which can be connected in various ways to form shaft angle measurement. All these devices work essentially on the same principle, that is of a rotating transformer. A Synchro appears like an AC motor consisting of a rotor and a stator.

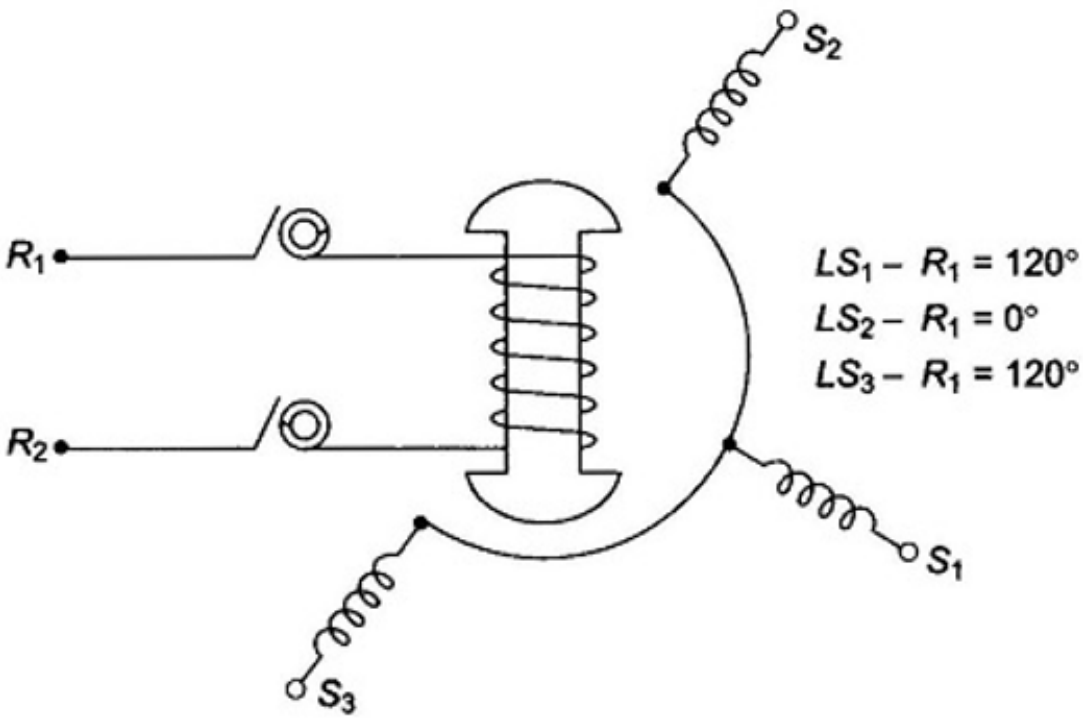

Figure 9: Basic Synchro

Synchro's are normally used in control systems, but have properties that can be used in instrumentation also.

A Synchro can be an angular position transducer working on Pressure Inductive Transducer principle, wherein a variable coupling between primary and secondary winding is obtained by changing the relative orientation of the windings.

Internally, most synchro's are similar in construction. They have a rotor with one or three windings capable of revolving inside a fixed stator. There are two common types of rotors, the salient pole and the wound rotor.

The primary winding is a single phase winding wound on a rotor made of laminations. The connection to the rotor windings are made through precision slip rings shown in Fig. 13.23.

The stator has a 3-phase winding with the windings of the 3-phase displaced by 120°. The synchro may be viewed as a variable coupling transformer. A synchro is also called a Selsyn.

The rotor is energized by an AC voltage and coupling between rotor and stator windings varies as a trigonometric or linear function of the rotor position.

Synchro systems consist of two or more interconnected synchros. They are grouped or connected together according to the purpose to be used.

A Synchro system formed by interconnection of the devices called the Synchro transmitter and Synchro control transmitter is perhaps the most widely used error detector in

feedback control systems. It measures and compares two angular displacements and its output voltage is approximately linear with angular displacement.

The conventional Synchro transmitter (TX) uses a salient pole rotor with sleeved slot. When an AC excitation voltage is applied to the rotor, the resultant current produces a magnetic field and by transformer action induces voltages in the stator coils. The effective voltage induced in any stator coil depends upon the angular position of the coil axis with respect to the rotor axis (when the coil voltage is known, the induced voltage at any angular displacement can be determined).

Initially winding S2 of the stator of transmitter is positioned for maximum coupling with the rotor winding as shown in Fig. 13.24(a). Suppose the voltage is V, the coupling between S1 and S2 of the stator and primary (rotor) winding is a cosine function. In general, if the rotor is excited by 50 Hz AC, also called reference voltage, the voltage induced in any stator winding will be proportional to the cosine of the angle between the rotor axis and the stator axis. The voltages induced across any pair of stator terminals (S1–S2, S1–S3, or S2–S3) will be sum or difference, depending on the phase of the voltage measured across the coils.

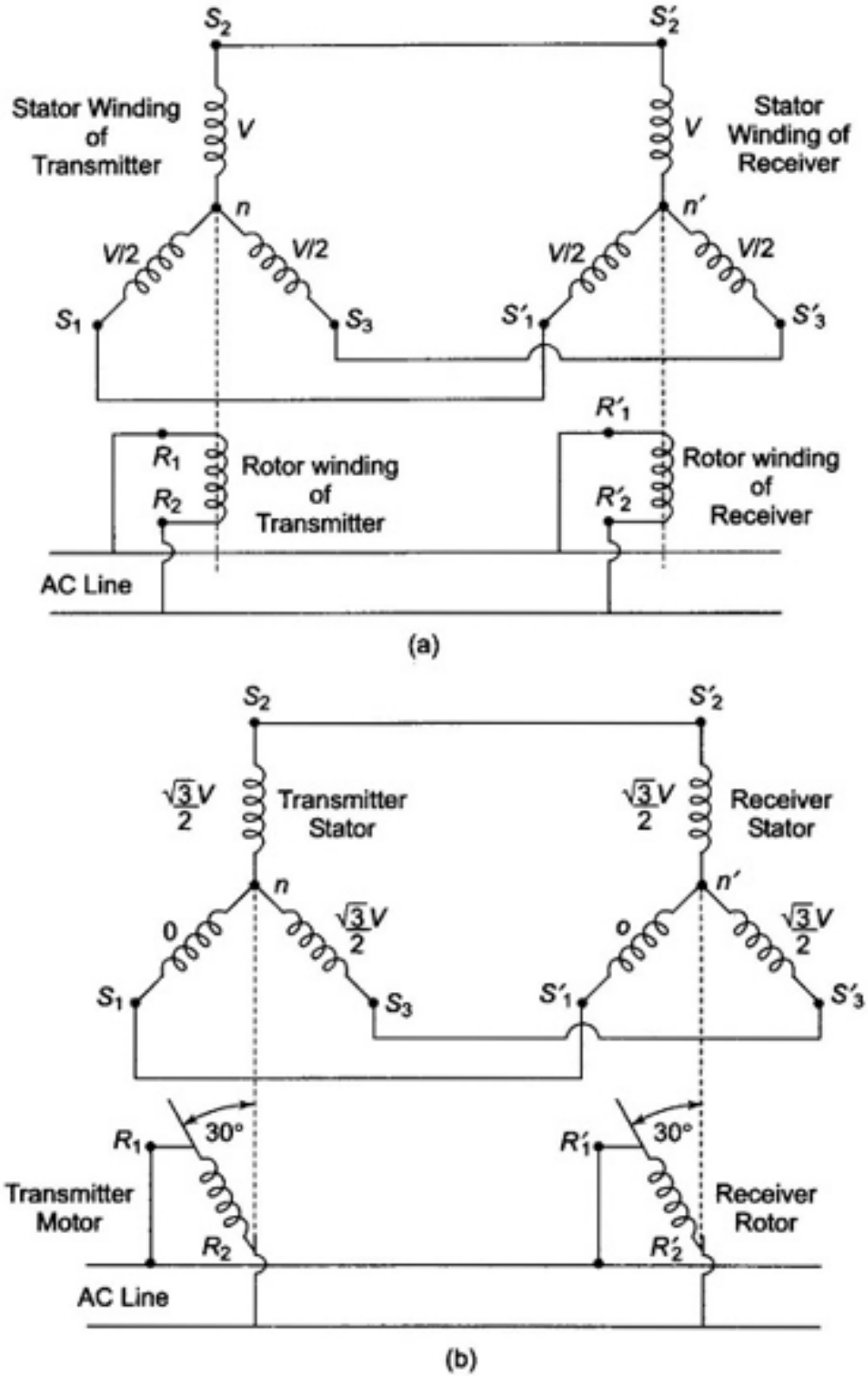

Figure 10: a.Torque Transmission Using Synchro Trans b.Follow up Conditions of Transmitter-Receiver System

For example, if a reference voltage $V \sin \omega t$ excites the rotor of a synchro (R1–R2), the stator terminals will have a voltage of the following form:

$$\text{Voltage} \propto \cos(\theta)$$

where θ is the shaft angle. These voltages are known as Synchro format voltages.

Therefore, the effective voltages in these windings are proportional to $\cos 60°$ or they are $V/2$ each. So long as the rotors of the transmitter and receiver remain in this position, no current will flow between the stator windings because of the voltage balance.

When the rotor of the transmitter is moved to a new position, the voltage balance is disturbed or changed. Assuming that the rotor of the transmitter is moved through 30° as shown in Fig. 13.24(b), the stator winding voltages of the transmitter will be changed to 0, $\sqrt{3}/2V$ and $\sqrt{3}/2V$ respectively.

Hence, a voltage imbalance occurs between the stator windings of the transmitter and receiver. This voltage imbalance between the windings causes current to flow between the windings producing a torque that tends to rotate the rotor of the receiver to a new position where the voltage balance is again restored. This balance is restored only if the receiver turns through the same angle as the transmitter and also the direction of rotation is the same as that of the transmitter. Hence a Synchro can be used to determine the magnitude and direction of angular displacement.

Torque synchros are required if it is necessary to transmit angular displacement information from a shaft of one Synchro to the shaft of another Synchro without using any additional amplifiers or gears.

Torque synchro are commonly connected in repeater system consisting of torque transmitter and torque receiver. These repeater systems are accurate to ±1° and are used in systems in which a rotating device's output is required to position a remote pointer.

Today, most of these units have been replaced by a Synchro-to-digital converter driving a LED display of the digital readout of angular position.

2. Selsyn

Synchros also called as Selsyn are motor-like devices used to form position sensing and indicating systems. Its principle is also based on the variation of mutual coupling between transmitter windings.

There are two types of Selsyn:

1. Torque type
2. Control type

Torque Type

Torque type of Selsyn consists of two rotors with a single winding and a stator with 3 windings distributed 120° apart. This section acts as a transmitter. The generator stator windings are connected to the other remotely located 3-phase windings. This section acts as a receiver and also has receiver rotor windings. The torque Selsyn is shown in Fig. 13.25.

The rotor of both units are excited through slip rings by an AC source at a convenient frequency.

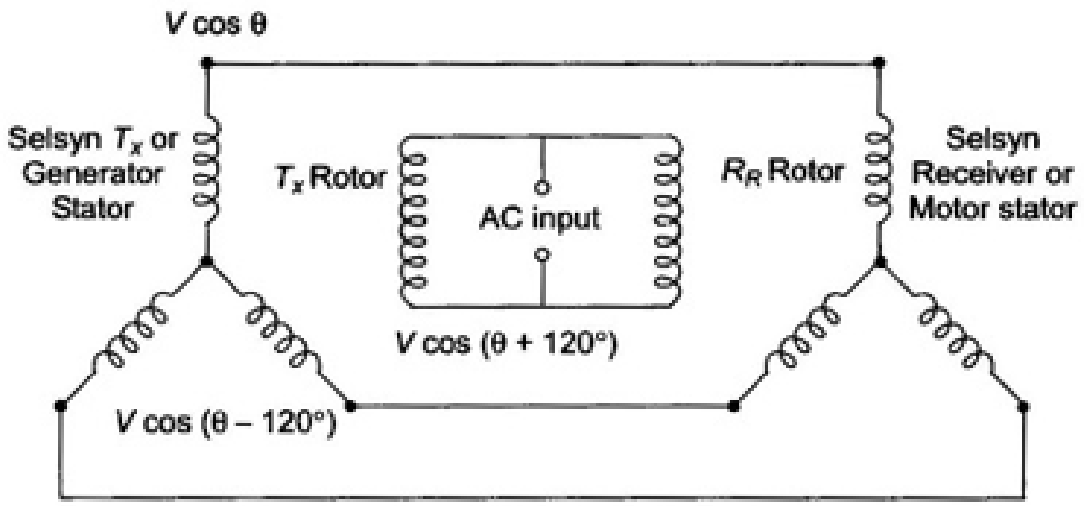

Figure 11: Torque Type

If the receiver rotor is in the same relative position with reference to stator windings as the transmitter, the Pressure Inductive Transducer coupling is identical and no stator current flows between the two units.

If the transmitter rotor is shifted from this null position, voltages induced in the two stators will be different and a current starts to flow. This current flow produces a torque in the receiver which causes the receiver rotor to move into alignment with the new transmitter rotor position and the previous null position is obtained. Hence the receiver always follows the angular motion in accordance with that of the transmitter. Its accuracy is limited by the friction of the receiver bearings and calibration of its dial face.

Control Synchro

When larger amounts of power or torque and greater accuracy are required, control synchros are used.

These devices are used for providing and handling control signals to a servo amplifier when more power and accurate angular displacement of a large load are required. The control synchros are not designed to handle any mechanical load.

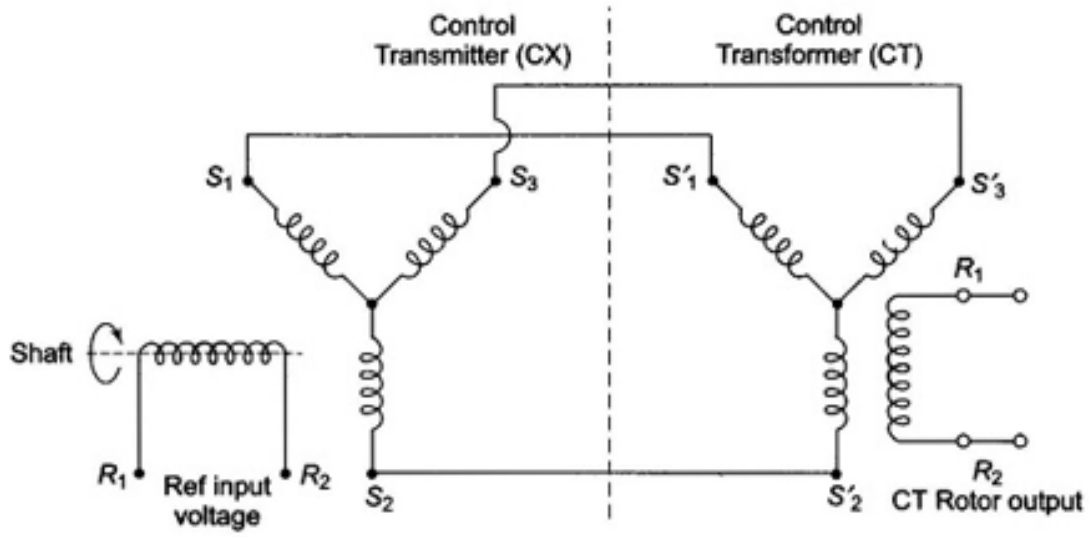

Figure 12: Synchro Control Systems

The Control Transformer (CT) develops an AC rotor output voltage that is proportional to the relative shaft angles between synchro transmitter and control transformer. The devices are normally connected as shown in Fig. 13.26.

The two most common control synchros are:

- Control Transmitter (CX)
- Control Transformer (CT)

The output of the CX (transmitter) is fed to the stator of the CT (transformer). The CT is a high impedance version of the torque receiver with its rotor aligned at 90° to that of transmitter (TR).

In a control system, when the shaft angle of the CX equals that of CT shaft angle, a minimum and null voltage will appear on the rotor terminals R1 and R2 of the CT. Any variation from this null will produce a signal in CT rotor whose phase will depend on which direction it is moved off the null.

A simple closed loop servo system using a CX and CT control system is shown in Fig. 13.27.

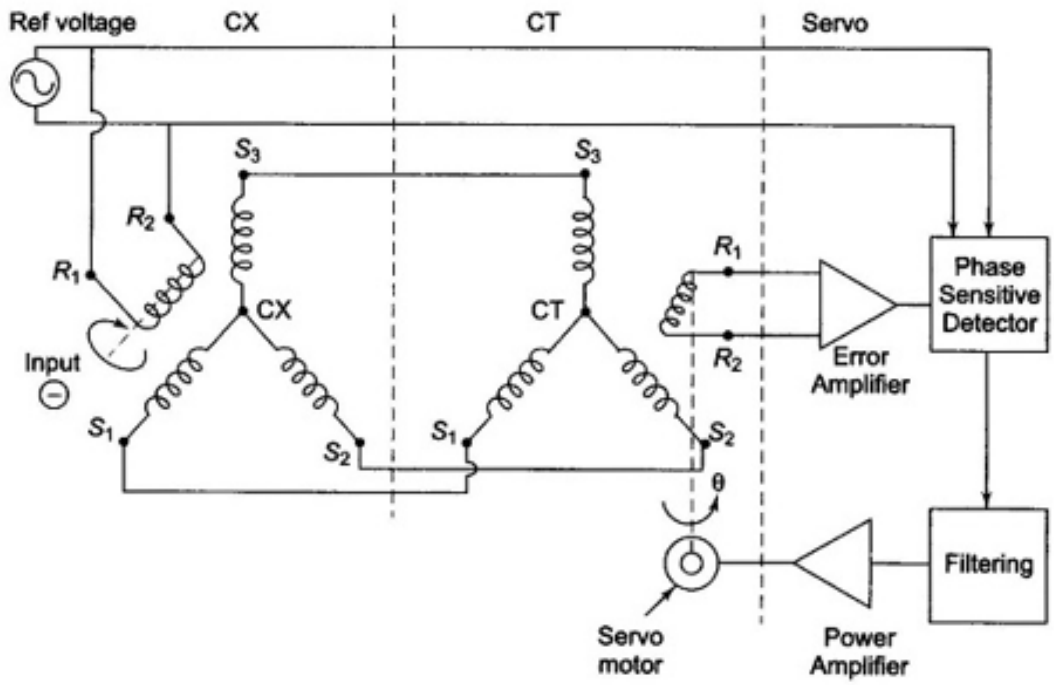

Figure 13: Simple Servo System using Control Synco

When the shaft of the CX is turned to some angle θ, S1, S2 and S3 output provide synchro format voltage as discussed previously. These voltages are transmitted to the CT stators S1, S2, S3. If the CT is not at the input angle θ, a voltage will be produced at the output of the CT rotor winding. This signal (error) is amplified, phase detected and fed to a servo amplifier to cause a servo motor to position a load and the CT shaft to a position where the CT rotor output is minimum (null). The direction, in which the motor turns towards the angle θ, is determined by the phase of the CT rotor with respect to the reference voltage. Hence servo action takes place.

Linear Variable Differential Transformer

The Linear Variable Differential Transformer (LVDT) is a type of passive inductive transducer used to measure linear displacement. It is a differential transformer with a high degree of accuracy and resolution.

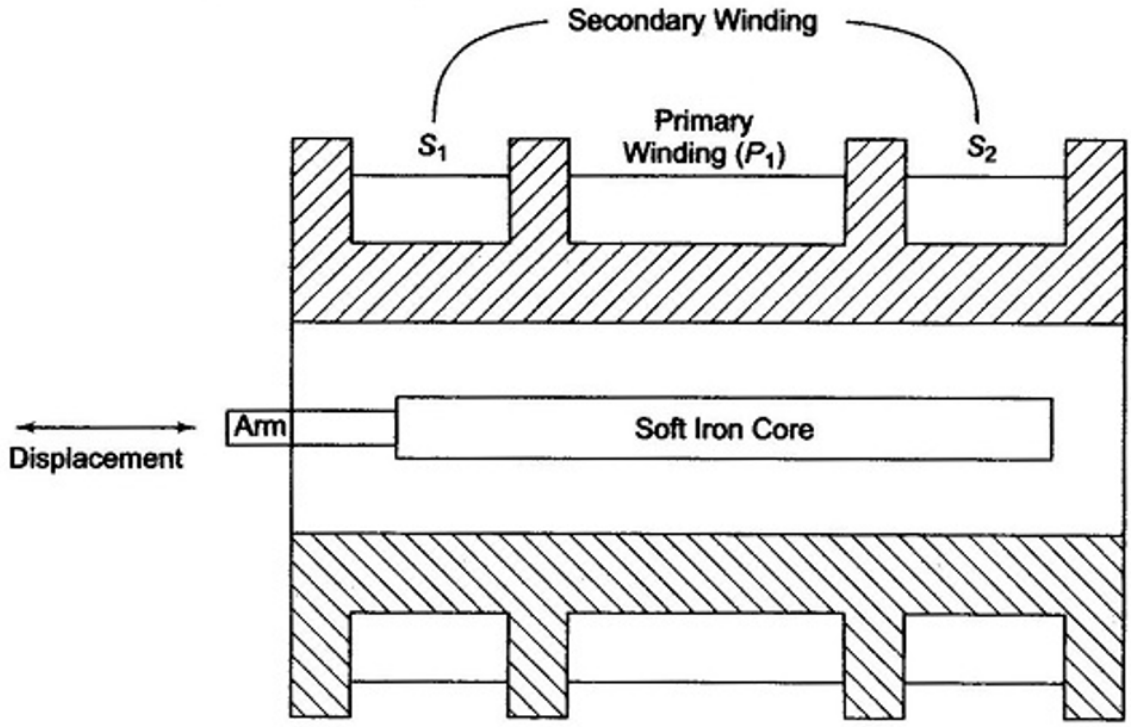

Figure 14: Linear Variable Differential Transformer

Construction

An LVDT consists of:

- A single primary winding P_1
- Two secondary windings S_1 and S_2 placed symmetrically on either side of the primary
- A movable soft iron core (typically a slotted nickel-iron alloy to reduce eddy currents)
- A hollow cylindrical former for winding support

The primary winding is excited by an AC source (typically 50 Hz to 20 kHz). The core's position determines the magnetic coupling between the primary and the secondary coils.

Working Principle

- When the core is at the central (null) position:

$$E_{s1} = E_{s2} \quad \Rightarrow \quad E_o = E_{s1} - E_{s2} = 0$$

- If the core moves to the left:

$$E_{s1} > E_{s2} \quad \Rightarrow \quad E_o = E_{s1} - E_{s2} > 0$$

  The output is in phase with E_{s1}.

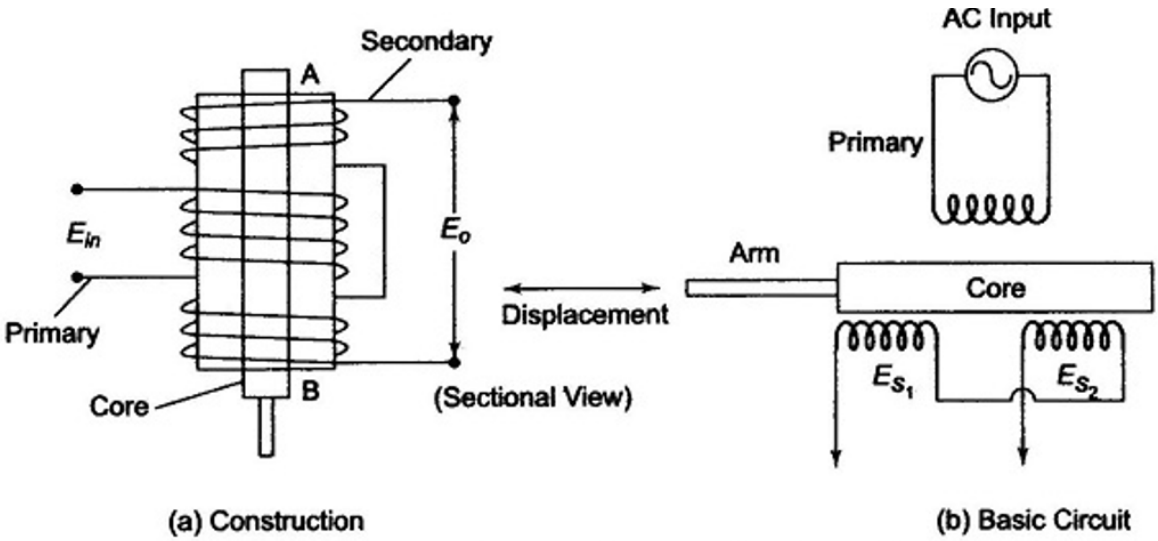

Figure 15: Enter Caption

- If the core moves to the right:

$$E_{s2} > E_{s1} \quad \Rightarrow \quad E_o = E_{s2} - E_{s1} > 0$$

  But this voltage is 180° out of phase with that obtained when the core moves to the left.

The output voltage E_o is a linear function of displacement within a range of ±5 mm. Beyond this, the linearity begins to deviate.

Characteristics

- Output voltage increases with displacement from null position
- The polarity of the voltage indicates direction
- Phase comparison with input signal provides directional information

Advantages of LVDT

1. **Linearity:** Output is linear up to ±5 mm with typical linearity of 0.05%
2. **Infinite resolution:** No discrete steps; limited only by measuring instruments
3. **High output:** Often eliminates the need for amplifiers
4. **High sensitivity:** Sensitivity up to 40 V/mm
5. **Ruggedness:** Withstands vibrations and mechanical shocks
6. **No sliding contacts:** Results in less friction
7. **Low hysteresis:** Excellent repeatability
8. **Low power consumption:** Typically ¡ 1 W

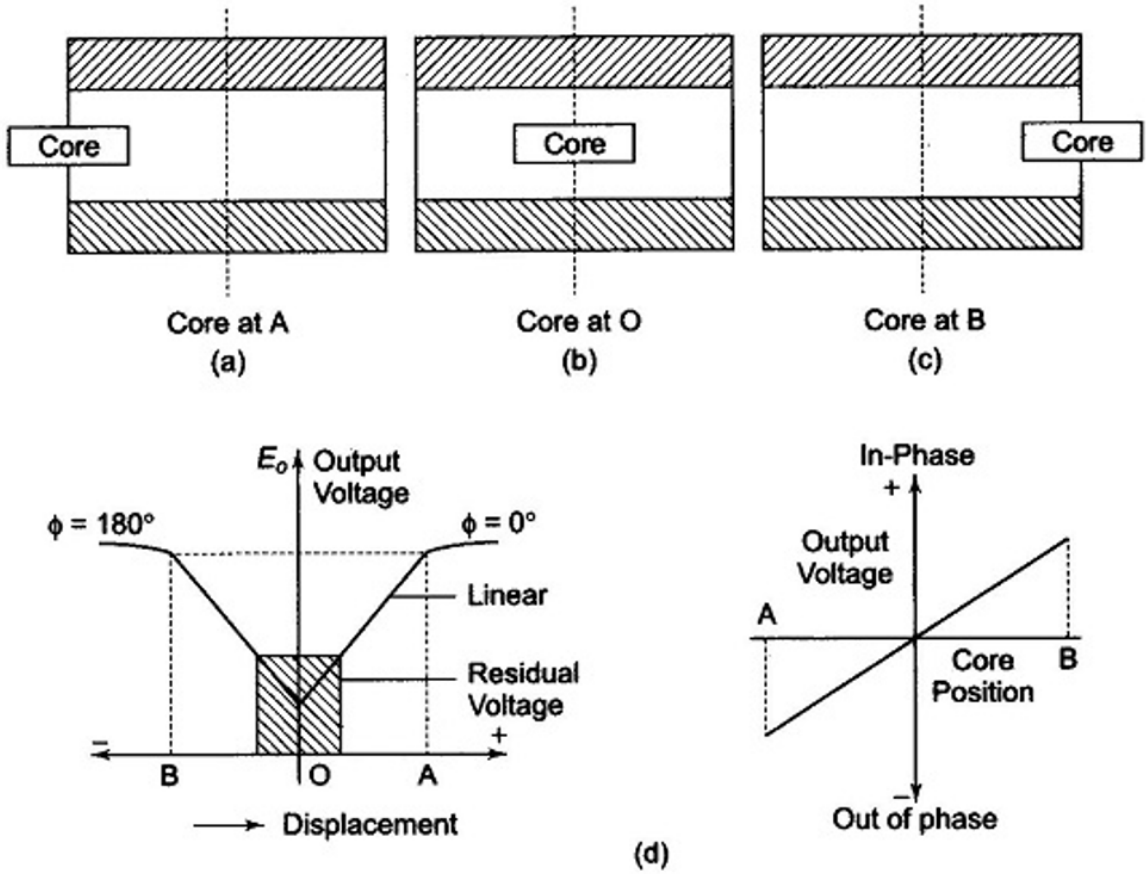

Figure 16: Enter Caption

Disadvantages of LVDT

1. Requires large displacement for significant output
2. Sensitive to stray magnetic fields (requires shielding)
3. Requires AC operation or demodulation for DC systems
4. Limited dynamic response due to core mass and electrical properties
5. Affected by temperature variations

Applications

LVDTs are used in aerospace, nuclear, industrial automation, and precision instrumentation due to their accuracy and rugged design.

Piezoelectric Transducer

Working Principle

Certain crystalline materials such as Quartz, Rochelle salt, and Barium titanate produce an emf when placed under mechanical stress. This property is exploited in piezoelectric transducers.

An externally applied force on the crystal produces a voltage proportional to the force. The transducer is self-generating and requires no external power source.

$$E = \frac{Q}{C_p}$$

where

- E is the output voltage,
- Q is the generated charge,
- C_p is the shunt capacitance.

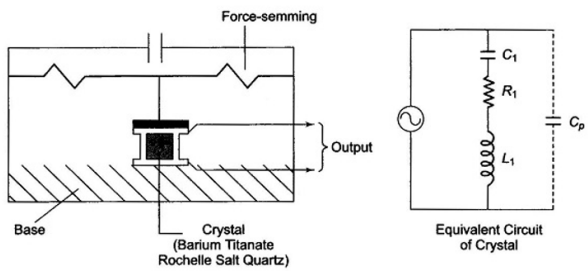

Figure 17: Piezoelectric Transducer

The transducer is mainly used for high-frequency accelerometers. It cannot measure static conditions and the output voltage is affected by temperature.

Energy Conversion

The mechanical energy applied to the crystal is partly converted into electrical potential (like charge on capacitor plates), and partly stored mechanically (like a compressed spring). When pressure is removed, the crystal returns to its original shape and loses its electric charge.

Coupling Coefficient K

The coupling coefficient relates electrical and mechanical energy:

$$K = \frac{\text{Electrical energy output}}{\text{Mechanical energy input}}$$

Advantages

- Stable natural resonance frequency.
- High frequency response.
- Self-generating, no external power needed.

Disadvantages

- Only measures dynamic pressure changes.
- Output is temperature sensitive.
- Requires careful shielding due to high impedance.

Resistance Thermometer Working Principle

The resistance of a conductor changes when its temperature is changed. This property is utilized for the measurement of temperature.

The resistance thermometer working principle is an instrument used to measure electrical resistance in terms of temperature.

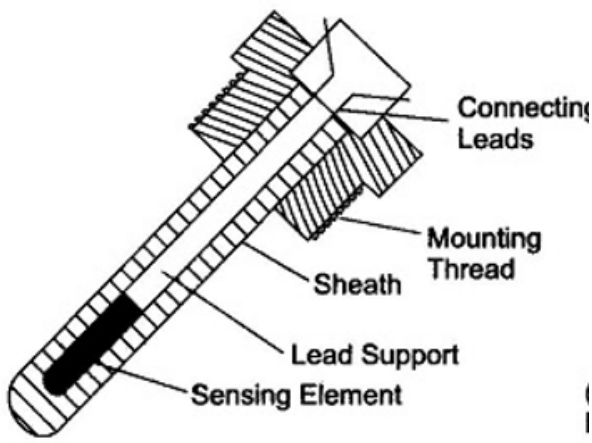

Figure 18: Industrial Platinum Resistance Thermometer

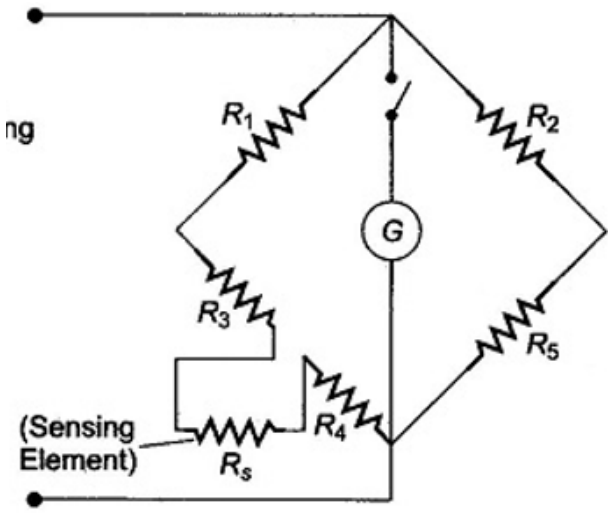

Figure 19: Bridge circuit

The main part of a resistance thermometer is its sensing element, determining sensitivity and temperature range. Types include wire wound resistance, thermistor, and PTC semiconductors.

Desirable characteristics:

- Stability in resistance and temperature coefficient
- Linearity with temperature
- Fast response due to small size

Common materials: platinum, nickel, copper. Platinum offers wide stability range: -260°C to 1100°C.

Detected using Wheatstone bridge (Fig. 13.11):

- Rs = sensing element
- R1, R2, R5 = stable resistors
- Galvanometer detects imbalance

If Rs changes, bridge unbalances and galvanometer deflects. This deflection is calibrated to a temperature scale.

Advantages:

1. Very accurate
2. Flexible choice of measuring equipment
3. Enables indicators, recorders, controllers
4. Multiple elements per indicator possible
5. Easy installation and replacement
6. Standard resistor checks accuracy

7. Differential temperature measurement
8. Wide range: -200°C to +650°C
9. Remote indication
10. Fast response: 2–10s
11. ±0.25% error of scale
12. Compact size (6–12 mm diameter, 12–75 mm length)
13. No compensation needed
14. Stable over time

Limitations:

1. High cost
2. Needs bridge and power source
3. Possibility of self-heating
4. Larger than thermocouples

Thermocouple Connection

One of the most commonly used methods of measurement of moderately high temperature is the thermocouple effect. When a pair of wires made up of different metals is joined together at one end, a temperature difference between the two ends of the wire produces a voltage between the two wires of Thermocouple Connection.

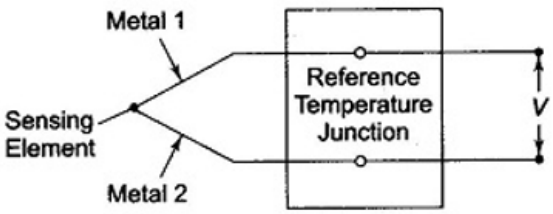

Figure 20: Basic Thermocouple Connection

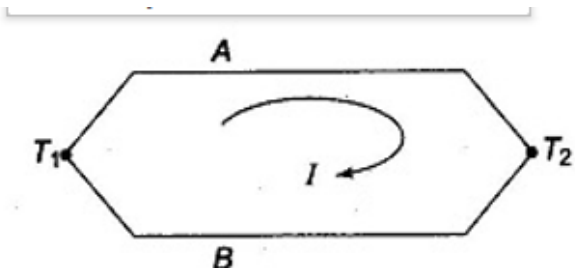

Figure 21: Current Through Two dissimilar Metals

Temperature measurement with Thermocouple Connection is based on the Seebeck effect. A current will circulate around a loop made up of two dissimilar metal when the two junctions are at different temperatures.

When this circuit is opened, a voltage appears that is proportional to the observed Seebeck current.

There are four voltage sources, their sum is the observed Seebeck voltage. Each junction is a voltage source, known as Peltier emf. Furthermore, each homogenous conductor has a self induced voltage or Thomson emf.

The Thomson and Peltier emfs originate from the fact that, within conductors, the density of free charge carriers increases with temperature.

If the temperature of one end of a conductor is raised above that of the other end, excess electrons from the hot end will diffuse to the cold end. This results in an induced voltage, the Thomson effect, that makes the hot end positive with respect to the cold end.

Conductors made up of different materials have different free-carriers densities even when at the same temperature. When two dissimilar conductors are joined, electrons will diffuse across the junction from the conductor with higher electron density. When this happens the conductor losing electrons acquires a positive voltage with respect to the other conductor. This voltage is called the Peltier emf.

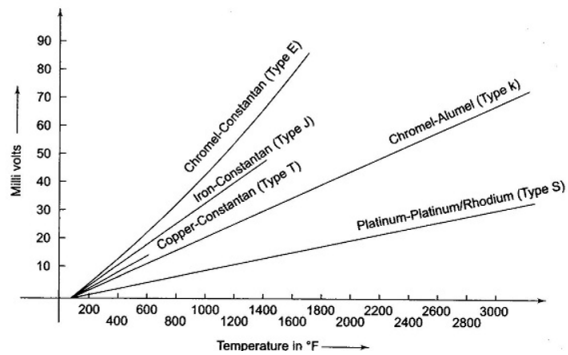

Figure 22: Thermocouple Output voltage as a function of Temperature for various Thermocouple materials

When the junction is heated a voltage is generated, this is known as Seebeck effect. The Seebeck voltage is linearly proportional for small changes in temperature. Various combinations of metals are used in Thermocouples.

A Thermocouple may be regarded as a thermometer based on thermo-emf.

Types of Thermocouples:

- Type E: Chromel and Constantan
- Type S: Least voltage, largest range
- Type T: Copper and Constantan
- Type J: Iron and Constantan

Cold junction compensation is essential. Ice bath or electronic circuits simulate 0°C.

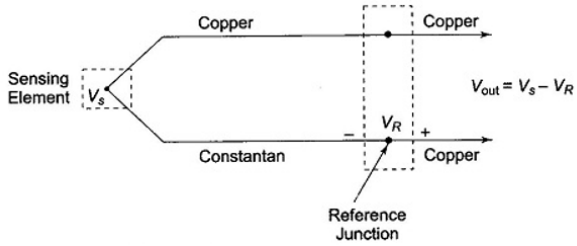

Figure 23: A Type T Thermocouple with Reference Junction

The magnitude of this voltage depends on the material used for the wires and the amount of temperature difference between the joined ends and the other ends. The junction of the wires is called the sensing junction, and this junction is normally placed in or on the unit under test.

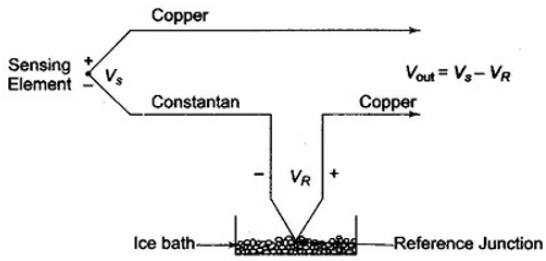

Figure 24: cold junction Compensation

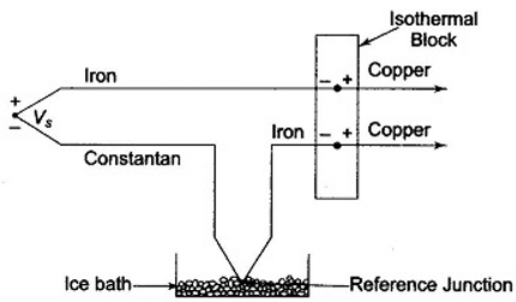

Figure 25: Type J Thermocouple using isothermal Block

The other ends are either kept at a constant reference temperature or at room temperature. In the latter case, temperature is monitored and output voltage readings are corrected.

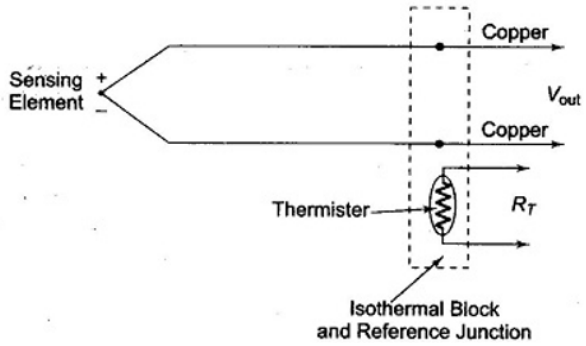

Figure 26: Refrence Junction Compensation used in Industry

The reference or cold junction is the other end of the thermocouple.

A Thermocouple Connection consists of a pair of dissimilar metal wires joined at one end (hot junction) and terminated at the other end (cold junction) maintained at a known constant temperature.

For accurate measurement of hot junction temperature, the cold junction or the reference junction should be kept at 0°C. If the reference junction is kept at the ambient temperature, then a voltage corresponding to this temperature must be added to the measurement to obtain accurate reading. Most modern Thermocouple Connection measurement systems employ electrical cold junction (an electronic circuit which simulates the voltage that the reference junction would generate at ambient temperature) compensation. A popular technique used for reference junction compensation used in data loggers and data acquisition systems is shown in Fig. 13.47. The measuring junction's terminals are screwed on an isothermal block (the temperature of which remains uniform within ± 0.05 °C). The temperature of the isothermal block is measured independently and compensating voltage is generated using electronic circuitry. This compensation voltage is combined with the emf from measuring junction to obtain the true temperature Thermocouples are sometimes connected in series or parallel to provide increased voltage or current output.

Thermocouple type	*Materials used*	*Temperature range/ °C*	*Sensitivity μV/°C*
Type T	Copper/Constantan	−200–400	15–60
E	Chromel/Constantan	0–850	40–55
J	Iron / Constantan	−200–900	45–57
K	Chromel/Alumel	−200–1250	40–55
R	Platinum/Platinum 13% Rhodium	0–1600	5–12
S	Platinum/Platinum 10% Rhodium	0–1500	5–12
B	Platinum 6% Rhodium/ Platinum 30% Rhodium	30–1800	0.3–0.8
G	Tungsten/Tungsten 26% Rhenium	15–2800	3–20
C	Tungsten 5% Rhenium/ Tungsten 25% Rhenium	0–2750	10–20

Figure 27: Different types of Thermocouples

When a temperature difference exists, an emf is produced, causing current in the circuit.

The meter indication is proportional to the temperature difference.

The magnitude of the thermal emf depends on the wire materials and temperature difference.

Thermopile: Several thermocouples in series for higher sensitivity.

The isothermal block contains two reference junctions and a thermistor. The resistance of the thermistor is a function of temperature. A circuit is used to sense this resistance and to compensate for the voltage introduced by the two reference junctions. This arrangement is sometimes called as Electronic ice point reference. If the sensor is interfaced to a computer, the reference temperature will be converted to a reference voltage and then subtracted from the output voltage Vout This process is known as Software Compensation. An isothermal block with one temperature sensor can provide compensation for several units.

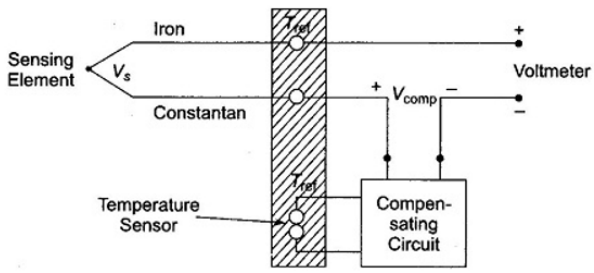

Figure 28: Practical Isothermal Block Reference Junction For Data Loggers etc

Thermocouple wires must be protected from mechanical and chemical damage. Protective tubes (thermowells) are used.

Thermocouple Connection must be protected from mechanical damage and isolated from corrosive or contaminating effect that most gases and liquids have at high temperature. The device used for this purpose are called wells or tubes depend¬ing upon their physical construction or thermowells. Thermocouples are made from a number of different metal alloys, covering a wide range of temperature from as low as -270 °C (-418 °F) to as high as 2700 °C (about 5000 °F). They may be obtained in a simple uninsulated wire form, in insulated form or inside protective sheaths or probes (sheath diameter as small as 0.25 mm).

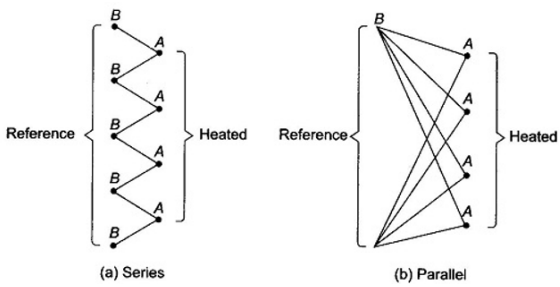

Figure 29: Thermocouples in series and parallel

The thermo-junction is protected from contamination from the process materials by enclosing it in a protective sheath. For example, a cupro-nickel sheath for copper/chromel thermocouple and mild sheath for iron/chromel thermocouples. The temperature ranges covered by thermocouples make them appropriate for use in industrial furnaces as well as for measurement in the cryogenic range

Thermocouples range: -270°C to 2700°C.

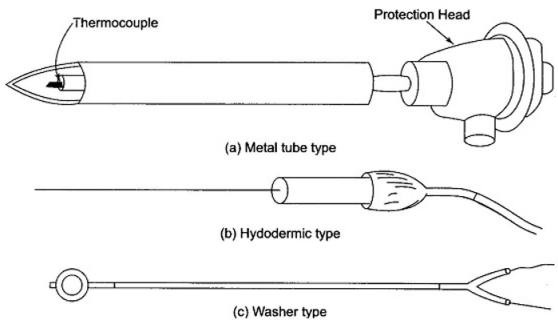

Figure 30: Different types of thermocouples

Advantages:

1. Rugged construction
2. Wide temperature range
3. Long-distance signal transmission
4. No bridge circuits needed
5. Cost-effective
6. Easy calibration checks
7. Good reproducibility
8. High response speed
9. Accurate measurements

Disadvantages:

1. Cold junction compensation required
2. Non-linearity in emf vs. temperature
3. Susceptibility to stray signals
4. Amplification often needed

Thermistor

Definition

The word **thermistor** is a combination of *thermal* and *resistor*. A thermistor is a resistor with definite thermal characteristics. Most thermistors have a **negative temperature coefficient** (NTC), but positive temperature coefficient (PTC) devices are also available.

The reason for the negative temperature coefficient of resistance in a semiconductor is that when its temperature is increased, the concentration of charge carriers increases resulting in a decrease in resistance.

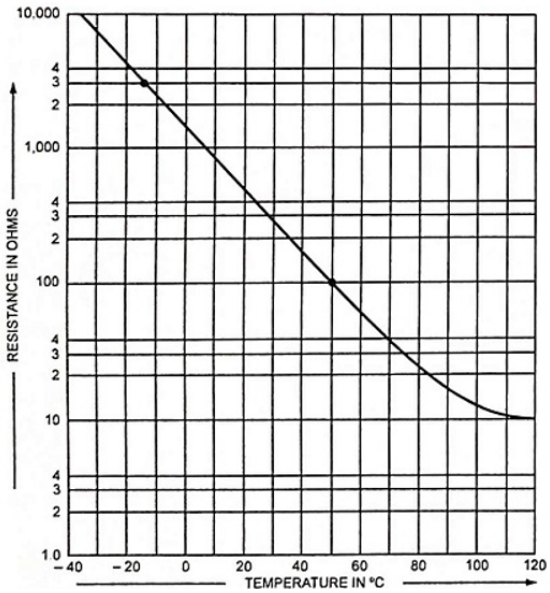

Figure 31: Typical Resistance Temperature Characteristic for a Thermistor

Thermistors are essentially semiconductor devices that behave as resistors with a high negative temperature coefficient (usually about −0.04 per °C at room temperature of 25°C). Thermistors have a very nonlinear resistance-temperature relation.

Resistance-Temperature Relationship

The resistance R of a thermistor at temperature T can be given by:

$$R = R_0 e^{\beta\left(\frac{1}{T} - \frac{1}{T_0}\right)}$$

where R_0 is the resistance at reference temperature T_0, and β is a constant depending upon the material and manufacturing technique.

For two temperatures T_1 and T_0, the relation becomes:

$$\ln \frac{R_1}{R_0} = \beta \left(\frac{1}{T_1} - \frac{1}{T_0} \right)$$

where R_1 and R_0 are resistances at absolute temperatures T_1 and T_0 respectively, and β is typically around 4000 K.

The temperature coefficient of resistance α is given approximately by:

$$\alpha = -\frac{\beta}{T^2}$$

For example, if $\beta = 4000$ and $T = 298$ K (25°C), then

$$\alpha \approx -0.045 \text{ per } ^\circ C.$$

Symbol

The commonly used symbol for the thermistor is shown in Figure 32.

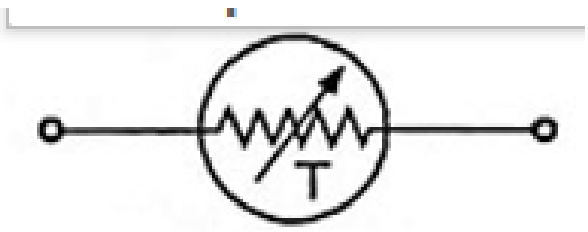

Figure 32: thermistor$_symbol$

Materials and Construction

Silicon and germanium are generally not used for manufacturing thermistors because larger and more predictable temperature coefficients are available with metal oxides. Modern thermistors are made from oxides of metals such as manganese, nickel, cobalt, copper, iron, zinc, aluminium, titanium, magnesium, and uranium.

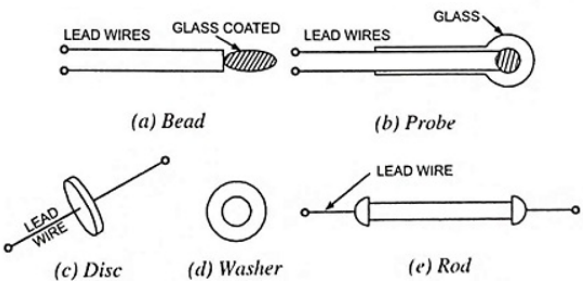

Figure 33: commercial forms of Thermistors

The oxides or their sulphides and silicates are milled, mixed, pressed into shape with binders, and sintered. Electrical terminals are embedded before sintering or baked afterwards. The resistance at room temperature varies from hundreds of ohms to megaohms. Thermistors can be manufactured in very small sizes like beads, discs, and rods.

V-I Characteristics

Figure **??** shows the typical resistance-temperature characteristic curve. Resistance decreases approximately 500 times when heated through 150°C.

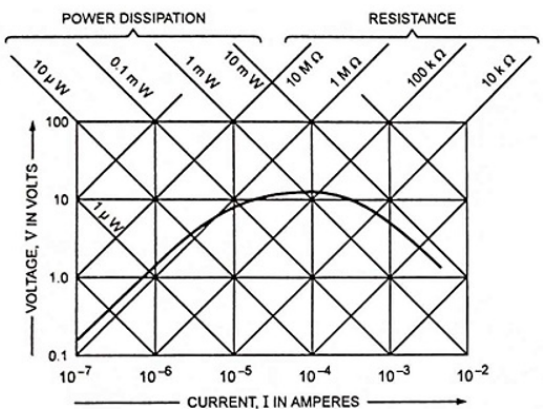

Figure 34: V-I Characteristics for a Thermistor

Current through the thermistor causes power dissipation and self-heating, so resistance depends on both ambient temperature and power dissipation. At very small currents, the device behaves like a constant resistor. As current increases, self-heating reduces the voltage across the device.

Applications

Thermistors are widely used for:

- Temperature compensation
- Measurement and control of temperature, liquid level, and gas flow

Remarks on Use of NTC Thermistors

- Do not use unprotected thermistors in conducting fluids or aggressive gases.
- Avoid high voltages to prevent self-heating and incorrect readings.

Positive Temperature Coefficient (PTC) Thermistors

PTC thermistors are resistors with a high positive temperature coefficient of resistance. Unlike NTC thermistors, their temperature coefficient is positive only within a certain temperature range.

- The temperature coefficient is usually much higher than that of NTC thermistors.
- They are used as current limiters, temperature sensors, and overheat protectors.

PTC thermistors are typically made from $BaTiO_3$ and $SrTiO_3$. Firing in oxygen-rich atmospheres produces a positive temperature coefficient due to potential barriers formed at crystal boundaries.

Remarks on Use of PTC Thermistors

- Do not exceed the maximum voltage $V_{\max}$ to avoid damage.
- Avoid connecting PTC thermistors in series.

Sensistor

A **sensistor** is a resistor whose resistance increases exponentially with temperature (positive temperature coefficient). They are made from heavily doped semiconductors and behave similarly to PTC thermistors but with a more gradual resistance change.

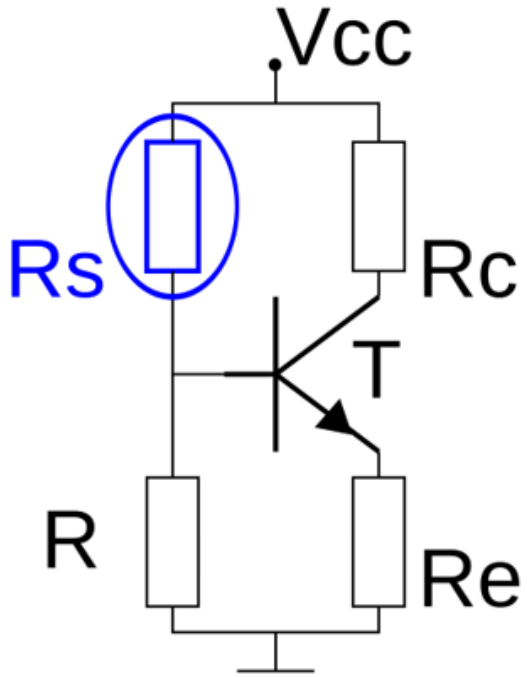
Vcc
Rs
Rc
T
R
Re

—