Dt:1/2/2026 DIGITAL SYSTEMS-EE1201-2026 TOTAL:60M

Duration:60min

1.The majority function is a Boolean function f(x, y, z) that takes the value 1 whenever a majority of the variables x, y, z are 1. In the circuit diagram for the majority function shown below, the logic gates for the boxes labelled P and Q are, respectively 5M

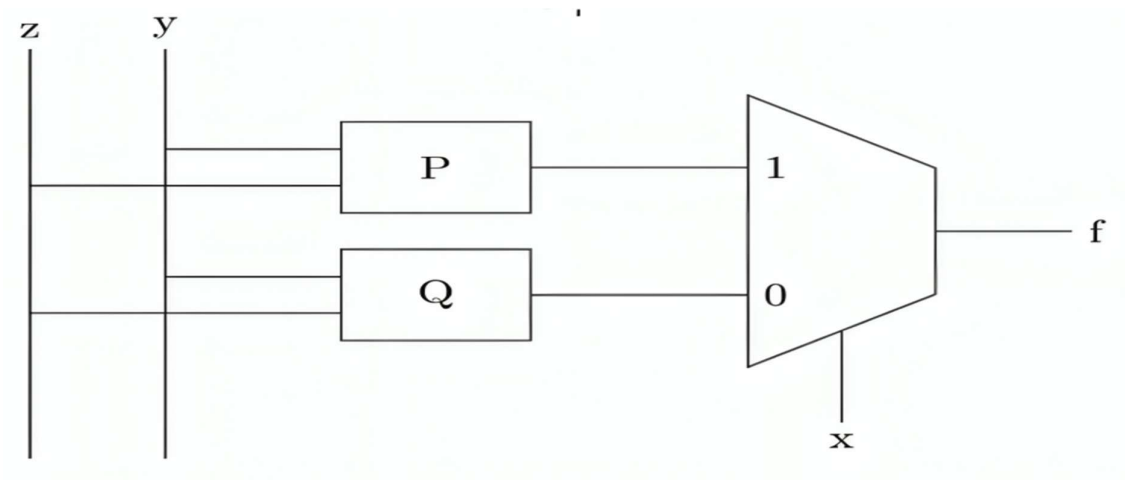

2a. Consider Boolean functions f1=∑m(4,5,6,7,8);f3=∑m(1,6,15),then f=(f1.f2)+f3 where f=∑m(1,6,8,15).Then f2 will be 4+2=6M

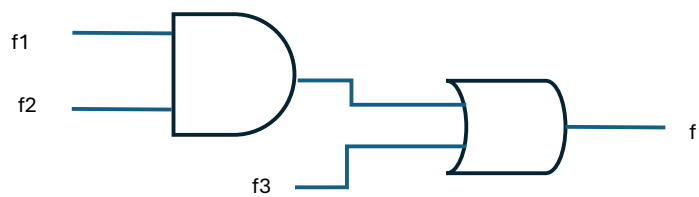

b. Implement F(A,B,C,D)=π(1,2,12,13,14)+d(5,9) using NAND gates.

3. A logic circuit realizing the function F has four inputs A, B, C, D. Three inputs A, B, C are the binary representations of the digits 0 through 7 with A being the MSB. The input D is an odd-parity bit. The function F has value 1 if the input digit is a prime number. 6M

The standard SOP form of F is

Odd parity bit: If the value of D is such that A, B, C and D always contains an odd number of 1's then D is said to be odd-parity bit.

4. A positive number 'N' Stored in 4 bit two's compliment as shown and it is copied into 8 bit register by some operation. Then if the value in 8 bit register is divided by $(100)_2$, what is the remainder? ***Register:*** It is a storage element that can store more than 1 bit data 3M

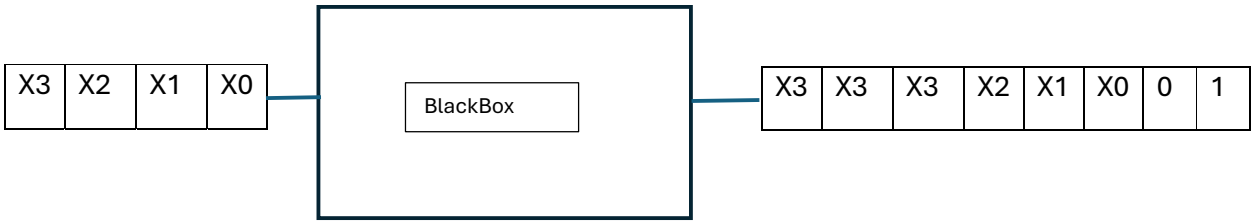

5.Three 2x1 MUX is to be used for generating the output F. With the help of following MUX tree, describe the choice of the signals to be connected to the inputs X1, X2, X3 and X4, so that the output is F(A,B,C) = ∑m(1, 2, 4, 5). 6M

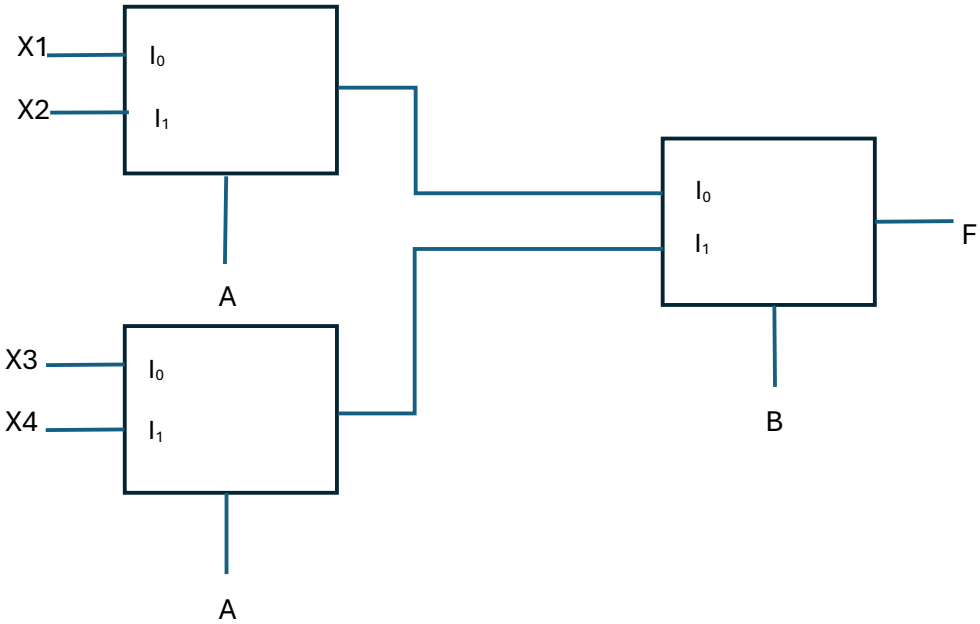

6. Reduce the expression F=∑m(1,2,3,5,7)+d(10,11,12,13,14,15) by Karnaugh Map Method. Indicate the prime implicants (PI) and essential Prime Implicants (EPI) in each map. 8M

7. What will be the output 'Y' ? 2M

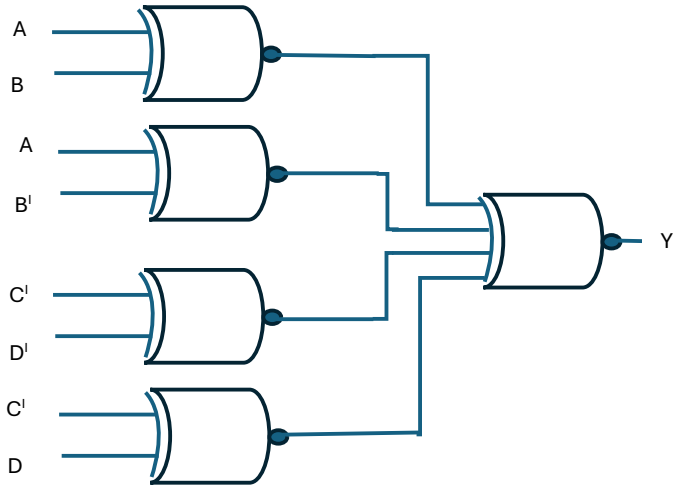

8. Convert a) $(0.65)_{10}$ into octal b) gray code (100011010) into binary and BCD

2+2+2=6M

9. A function f(A, B, C, D) = ∑m (0,1,2,5,7,9,12,15) is to be implemented using a 8×1 MUX shown in figure, which uses A, C and D as select lines. The values of input lines I_0 to I_7,

6M

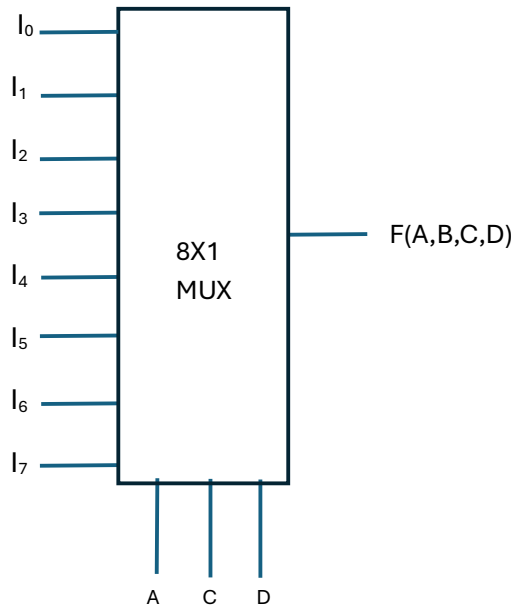

10.a) Consider a circuit shown in figure with three inputs and three outputs

6+6=12M

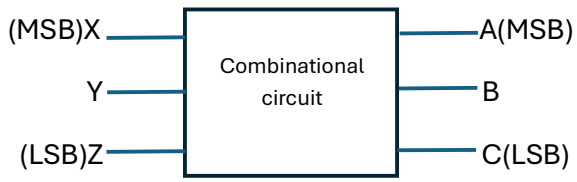

When binary input is 0, 1, 2 or 3 the binary output is one greater than the input. When the binary input is 4, 5, 6 and 7 the binary output is one less than the input. Implement the combinational block using full adder.

b) Consider a Boolean function f(w, x, y, z) such that

f(w, 0, 0, z) = 1

f(1,x,1,z)=x + z

$f(w,1,y,z)=wz + y$

The number of literals in the minimal sum-of-products expression of f is