Dt:26/2/2026 DIGITAL SYSTEMS-EE1201-2026 TOTAL:75M

Duration:90min

Note: While answering the questions , make sure that you will give proper Justification for what you are writing . For example , if it's a question on designing counter which generates a random sequence, then you should write down all the steps that the question demands (truth stable , state diagram , circuit you designed , kmap's etc..)

1)For the circuit given in Fig(b) X ,A ,B ,Y are the inputs and Q, Q' are the outputs where Z represents the delay block with a delay t_d (t_d<<T/4) and all the Gates are ideal (zero delay) . If the inputs are as given below in fig(a) 15M

a) Draw the output waveforms for Q and Q' and Write the Logic Gate outputs at respective input transitions , which justifies output waveforms.

b) What is the role of X and Y inputs in settled state?

c) What does the circuit represent i.e, if it is a latch, mention positive sensitive or negative sensitive ,if it is a flipflop, then mention positive triggered or negative triggered?

Justify above with the waveforms.

(***Settled state*** *refers to a stable condition where a digital circuit or system has reached a specific state after processing input signals*)

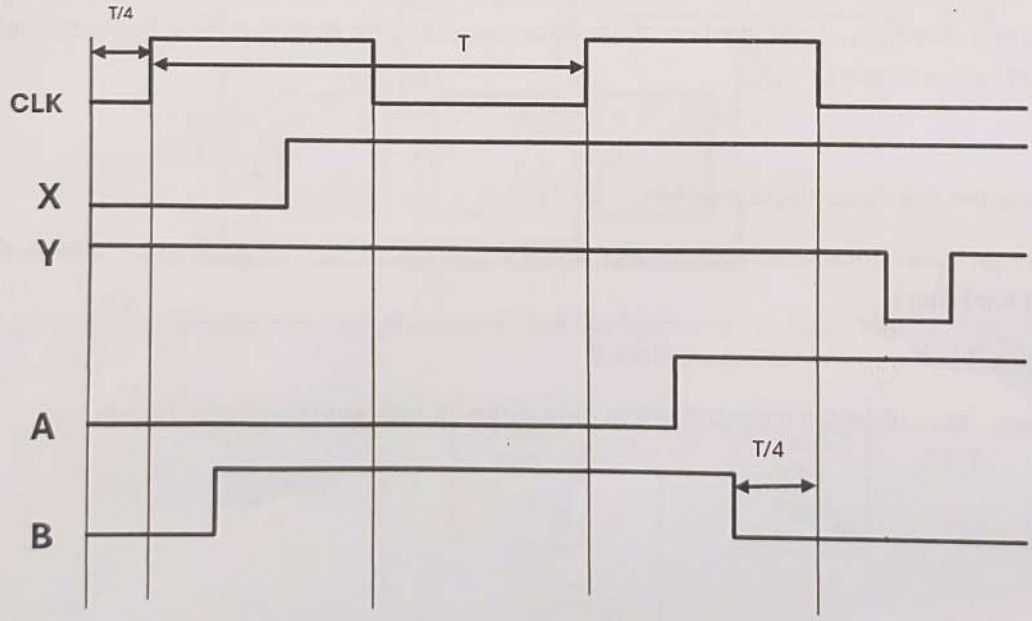

Fig(a)

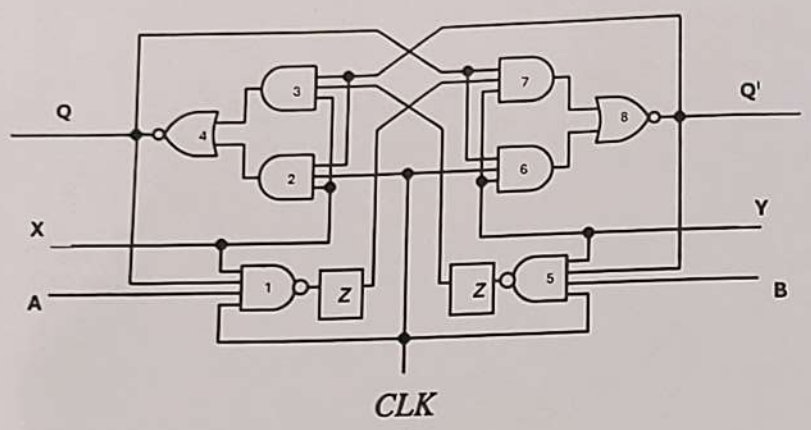

Fig(b)

2)Draw the state diagram of a sequence detector , which detects all the three sequences1100 , 1010 , 1001 . Consider the minimum states case , draw state diagram for it , using a) mealy (overlapping not allowed) b) mealy (overlapping allowed) . What are Minimum no.of states are required to design this . If u wish to design this using flip flops and counters , minimum no.of flip flops required (for both synchronous case and asynchronous case) . 20M

3)Consider the state diagram given

a) Design the counter which counts as the state diagram ,using T flip flops .(use minimum no.of flip flops) 15M

b) Does it suffer from lockout problem ?

c) If yes , then redesign it such that it avoids lock out .(use minimum no.of flip flops)

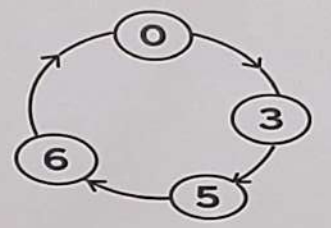

4)For the synchronous sequential circuit shown below, the output Z is zero for the initial conditions QAQBQC =Q'A Q'B Q'C = 100. What will be the minimum number of clock cycles after which the output Z would again become zero. Justify by drawing state table. 10M

(***State table*** describes the behaviour of a sequential circuit as a function of stable internal conditions, states , and input variables. For each combination of these, the next state of the circuit is specified together with any output variables)

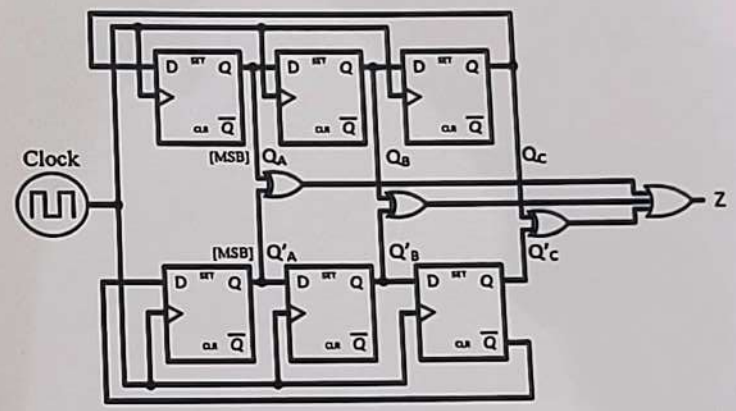
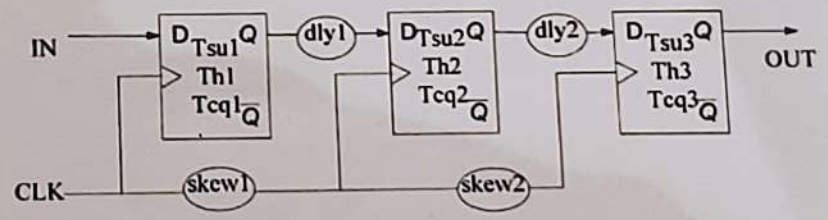
5)What is the maximum frequency of operation for the following configuration?