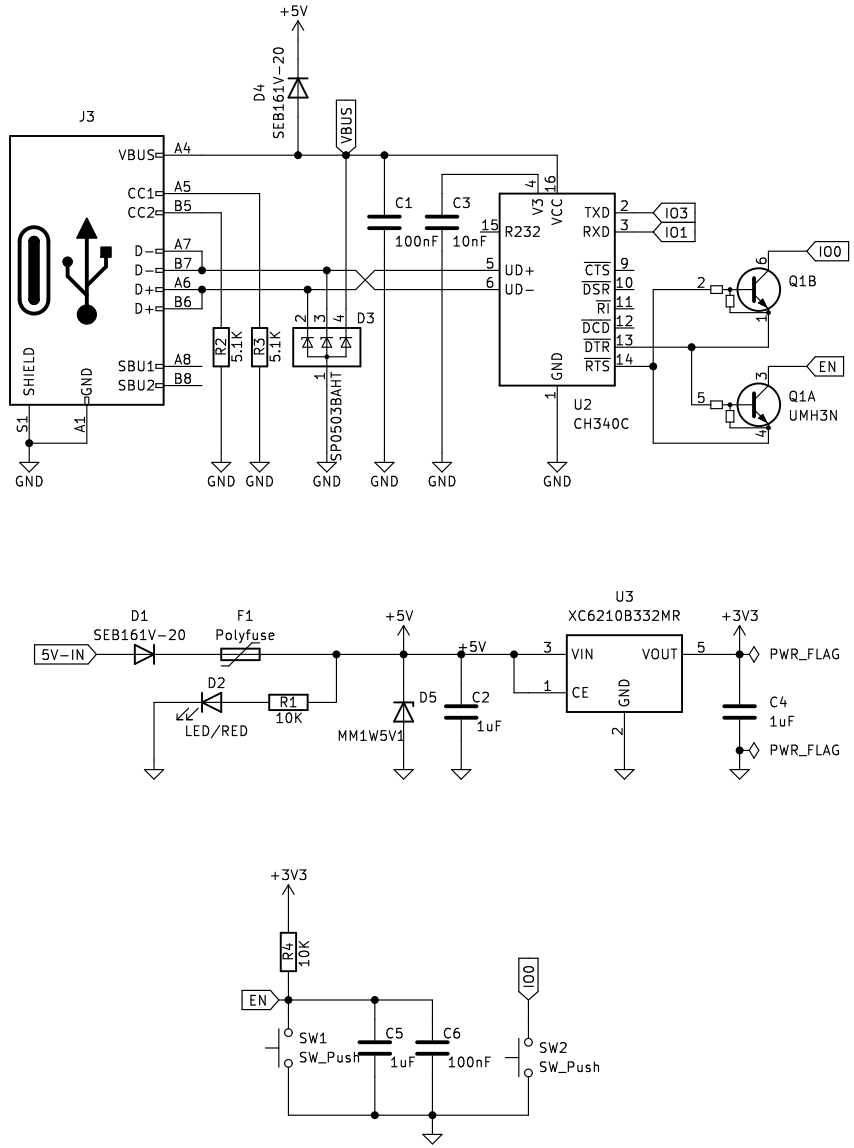

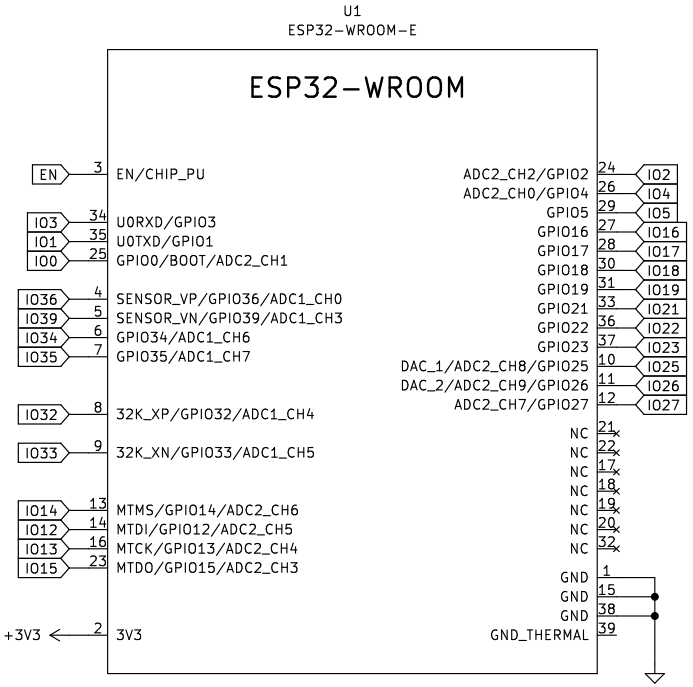

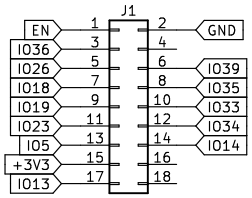

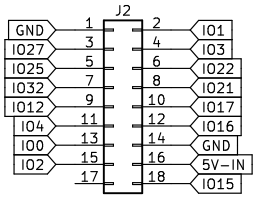

Sheet: /
File: Wemos_16mb.kicad_sch

Title: ESP32 mini board by SerKo

Size: USLetter	Date: 2023-01-01	**Rev: v1**
KiCad E.D.A. kicad (6.0.10-0)		Id: 1/1