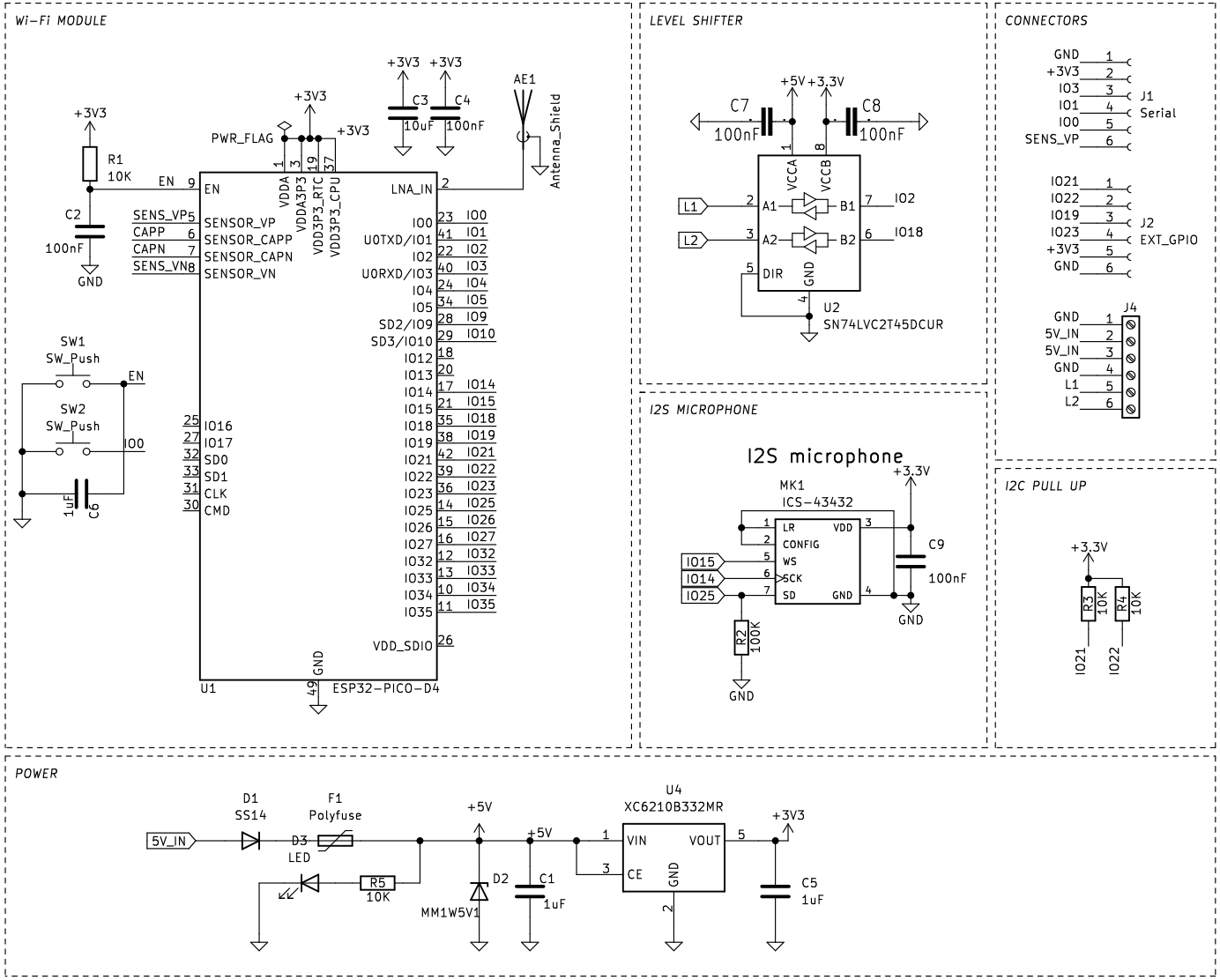
Wi-Fi MODULE
+3V3
R1
10K
EN
C2
100nF
GND
SW1
SW_Push
SW2
SW_Push
IO0
1uF
C6
PWR_FLAG
+3V3
C3
10uF
C4
100nF
AE1
Antenna_Shield
SENS_VP
CAPP
CAPN
SENS_VN
EN
SENSOR_VP
SENSOR_CAPP
SENSOR_CAPN
SENSOR_VN
VDDA
VDDA3P3
VDD3P3_RTC
VDD3P3_CPU
LNA_IN
IO0
U0TXD/IO1
IO2
U0RXD/IO3
IO4
IO5
SD2/IO9
SD3/IO10
IO12
IO13
IO14
IO15
IO18
IO19
IO21
IO22
IO23
IO25
IO26
IO27
IO32
IO33
IO34
IO35
VDD_SDIO
IO16
IO17
SD0
SD1
CLK
CMD
GND
U1
ESP32-PICO-D4
LEVEL SHIFTER
+5V
+3.3V
C7
100nF
C8
100nF
VCCA
VCCB
L1
L2
A1
A2
B1
B2
DIR
GND
IO2
IO18
U2
SN74LVC2T45DCUR
CONNECTORS
GND
+3V3
IO3
IO1
IO0
SENS_VP
J1
Serial
IO21
IO22
IO19
IO23
+3V3
GND
J2
EXT_GPIO
J4
GND
5V_IN
5V_IN
GND
L1
L2
I2S MICROPHONE
I2S microphone
MK1
ICS-43432
+3.3V
LR
CONFIG
WS
SCK
SD
VDD
GND
IO15
IO14
IO25
R2
100K
C9
100nF
GND
I2C PULL UP
+3.3V
R3
10K
R4
10K
IO21
IO22
POWER
5V_IN
D1
SS14
F1
Polyfuse
D3
LED
R5
10K
+5V
D2
MM1W5V1
C1
1uF
U4
XC6210B332MR
VIN
CE
VOUT
GND
+3V3
C5
1uF