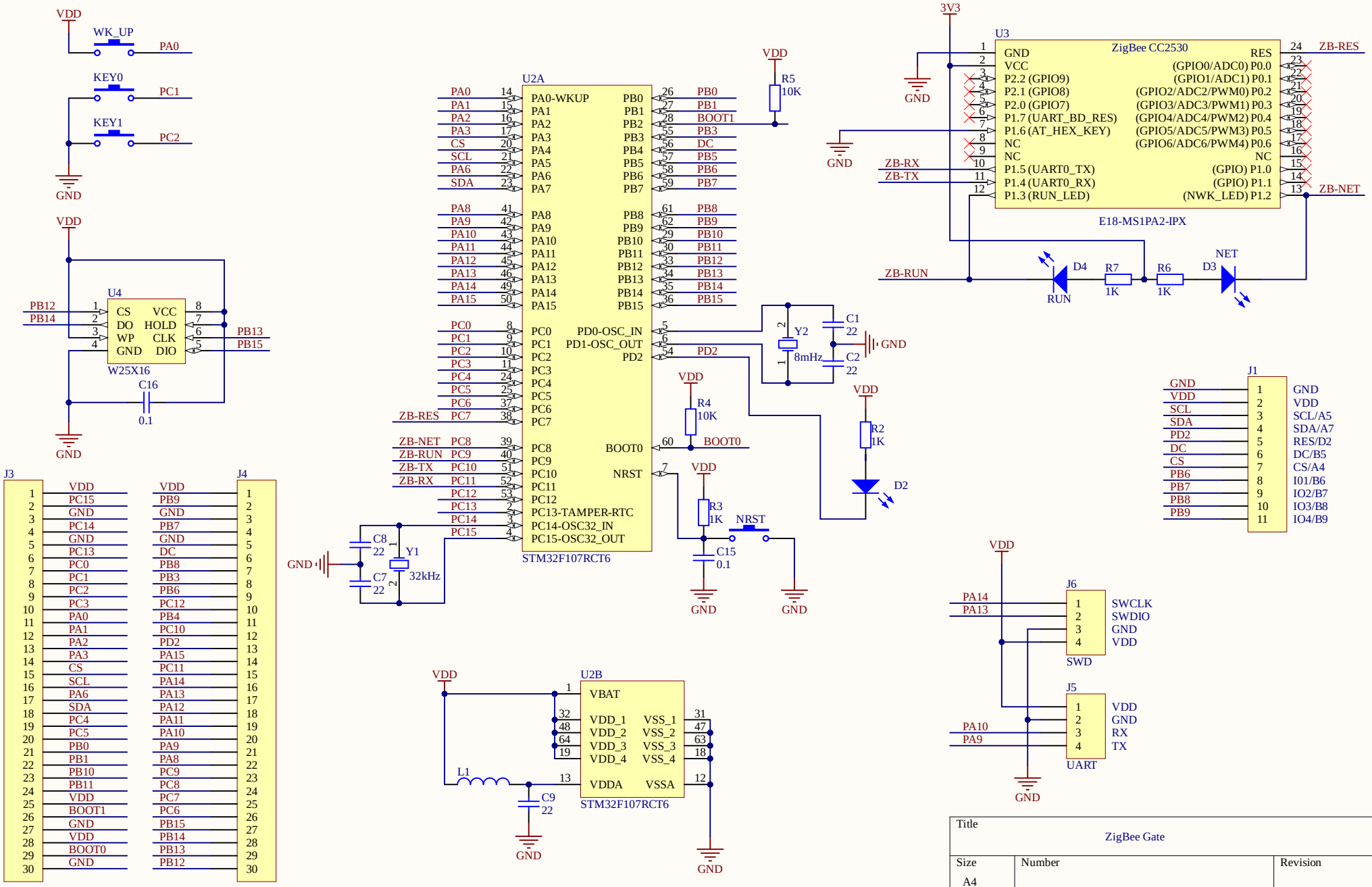
VDD
WK_UP
PA0
KEY0
PC1
KEY1
PC2
GND
U4
PB12
PB14
CS
DO
WP
GND
VCC
HOLD
CLK
DIO
PB13
PB15
W25X16
C16
0.1
U2A
PA0-WKUP
PA1
PA2
PA3
PA4
PA5
PA6
PA7
PA8
PA9
PA10
PA11
PA12
PA13
PA14
PA15
PC0
PC1
PC2
PC3
PC4
PC5
PC6
PC7
PC8
PC9
PC10
PC11
PC12
PC13-TAMPER-RTC
PC14-OSC32_IN
PC15-OSC32_OUT
PD0-OSC_IN
PD1-OSC_OUT
PD2
BOOT0
NRST
PB0
PB1
PB3
PB4
PB5
PB6
PB7
PB8
PB9
PB10
PB11
PB12
PB13
PB14
PB15
BOOT1
DC
ZB-RES
ZB-NET
ZB-RUN
ZB-TX
ZB-RX
STM32F107RCT6
R5
10K
R4
10K
R3
1K
NRST
C15
0.1
Y2
8mHz
C1
22
C2
22
R2
1K
D2
C8
22
C7
22
Y1
32kHz
J3
J4
U2B
VBAT
VDD_1
VDD_2
VDD_3
VDD_4
VDDA
VSS_1
VSS_2
VSS_3
VSS_4
VSSA
L1
C9
22
3V3
U3
ZigBee CC2530
GND
VCC
P2.2 (GPIO9)
P2.1 (GPIO8)
P2.0 (GPIO7)
P1.7 (UART_BD_RES)
P1.6 (AT_HEX_KEY)
NC
P1.5 (UART0_TX)
P1.4 (UART0_RX)
P1.3 (RUN_LED)
RES
(GPIO0/ADC0) P0.0
(GPIO1/ADC1) P0.1
(GPIO2/ADC2/PWM0) P0.2
(GPIO3/ADC3/PWM1) P0.3
(GPIO4/ADC4/PWM2) P0.4
(GPIO5/ADC5/PWM3) P0.5
(GPIO6/ADC6/PWM4) P0.6
(GPIO) P1.0
(GPIO) P1.1
(NWK_LED) P1.2
E18-MS1PA2-IPX
D4
RUN
R7
1K
R6
1K
D3
NET
J1
J6
SWD
SWCLK
SWDIO
J5
UART
RX
TX
Title
ZigBee Gate
Size
A4
Number
Revision
Date: 3.24.2023
Sheet of 1
File: C:\EmbeddedProject\..\main.SchDoc
Drawn By: SRG