Outlines

- Basic Structure of Computer Organization
  - System Organization
  - CPU Organization
  - Memory Organization and Interfacing
  - I/O Organization and Interfacing
  - Relatively Simple Computer
- Basic Functionality of Computer Organization

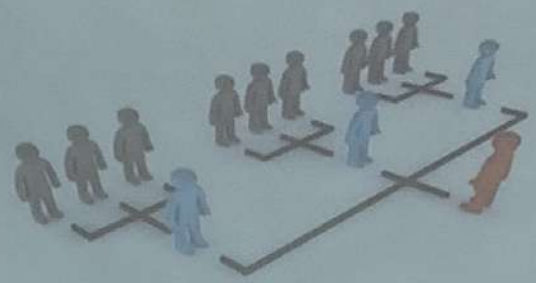

Structure

- Computer Organization refers to the operational units and their interconnections that realize the architectural specifications.
- A computer is a complex system.
- the computer contains millions of electronic components.
- Being a complex system, it needs to study in a simple way.
- Structure is the way in which components relate to each other.

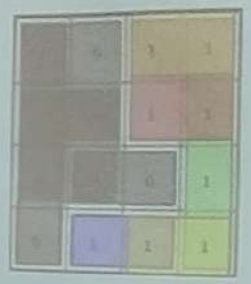

All tools Edit Export E-Sign

Why Computer Structure

- The structure of a computer depicts
  - how the components of the computer are assembled,
  - how they are interrelated to each other and
  - what operations these components perform.

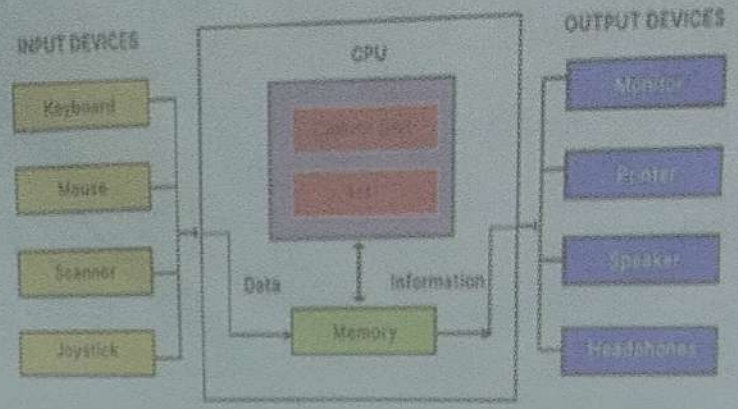

Objectives

- Identify the components of the central processing unit and how they work together and interact with memory
- Describe how program instructions are executed by the computer.
- Explain how data is represented in the computer
- Describe how the computer finds instructions and data
- Describe the components of a microcomputer system unit's motherboard
- List the measures of computer processing speed and explain the approaches that increase speed

Structural View

- Top-down view
- Bottom-up view

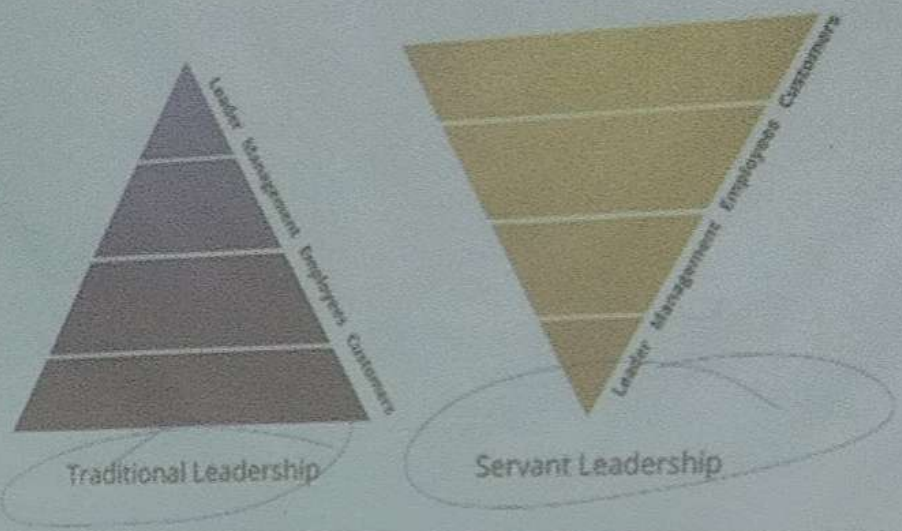

Computer System Components

- CPU/Microprocessor
- Memory Subsystem
- I/O Subsystem

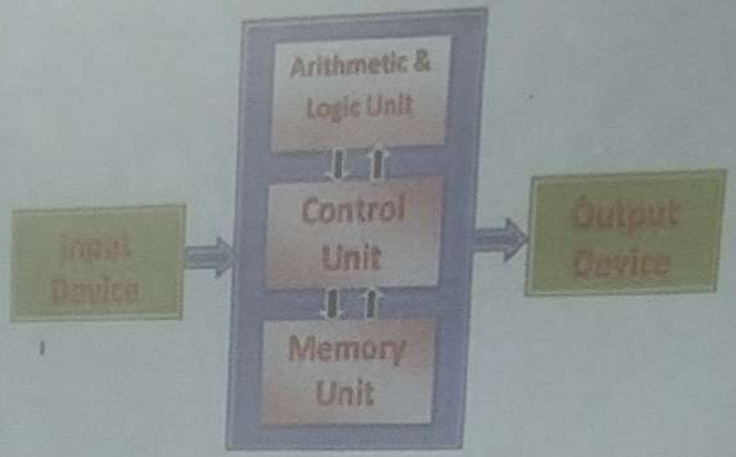

Basic Computer Organization

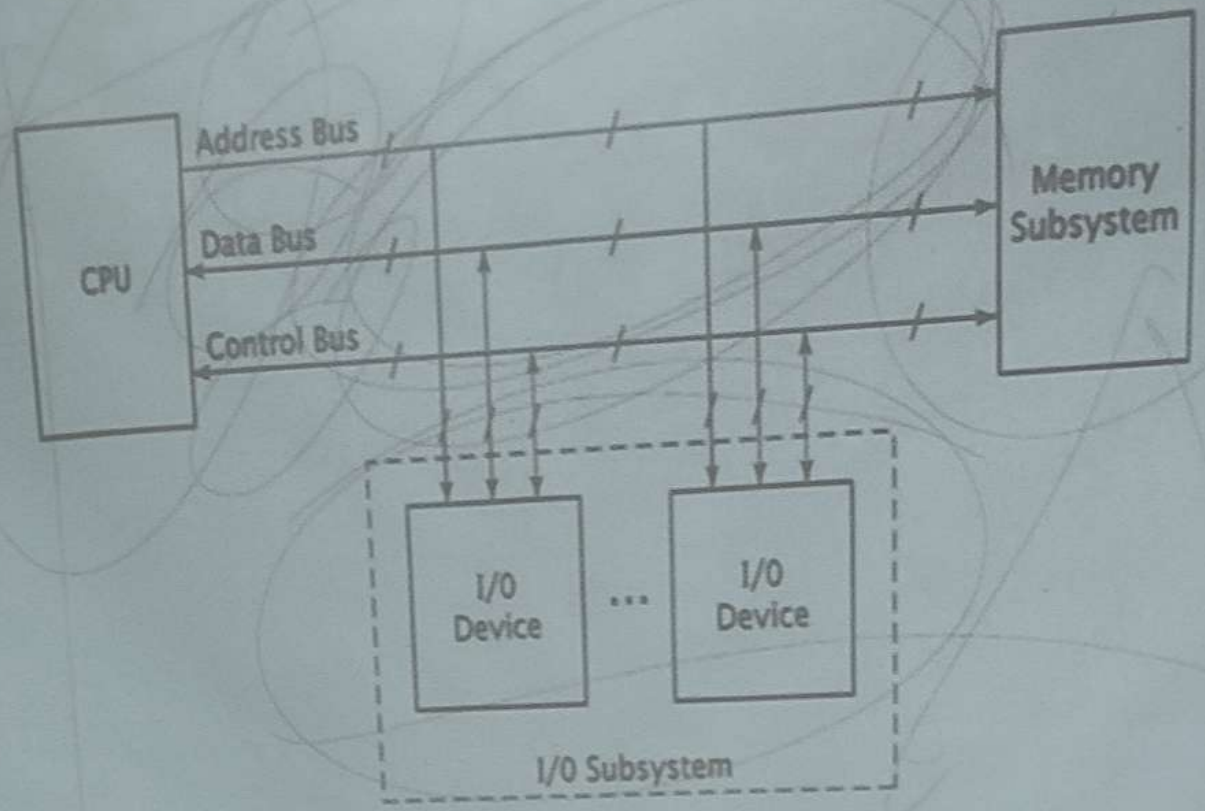

Central Processing Unit

- A central processing unit (CPU) is the most and fundamental processing unit in a given computer.
- Also called a *central processor, main processor, or microprocessor.*
- A processor is the *brain of a computer.*
- Most modern CPUs are implemented on integrated circuit (IC) microprocessors, with one or more CPUs on a single IC chip.
- The individual physical CPUs, processor cores, can also be multithreaded to create additional virtual or logical CPUs

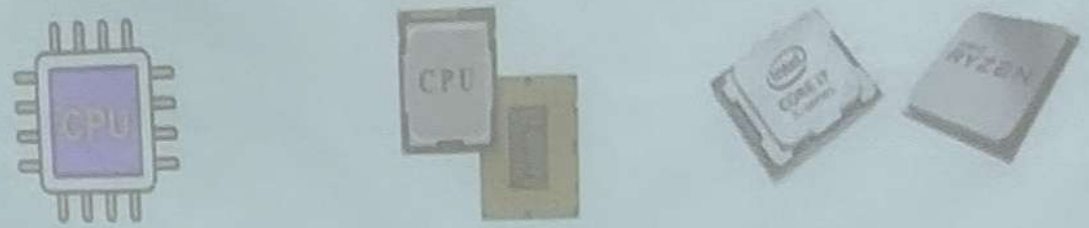

Central Processing Unit

- Microprocessor chips with multiple cores are *multi-core processors.*
- A *multicore system* has a single processor with multiple execution units called **cores.**
- A *multiprocessor system* has two or more processors.

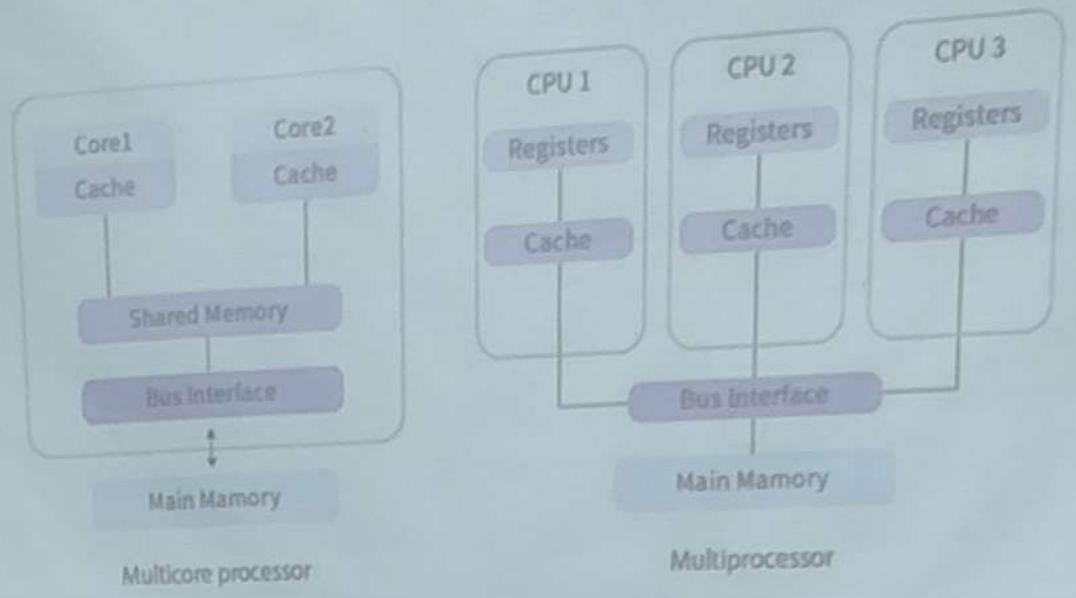

Multicore Processor

- *A multicore processor is an integrated circuit that has two or more processor cores attached for enhanced performance and reduced power consumption.*
- These processors also enable more efficient simultaneous processing of multiple tasks, such as with parallel processing and multithreading.
- The use of multicore processors or microprocessors is one approach to boost processor performance without exceeding the practical limitations of semiconductor design and fabrication. Using multicores also ensure safe operation in areas such as heat generation.

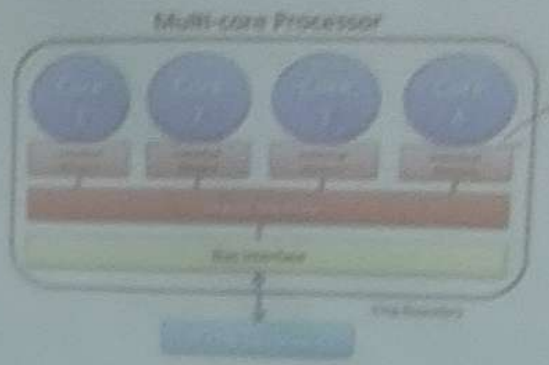

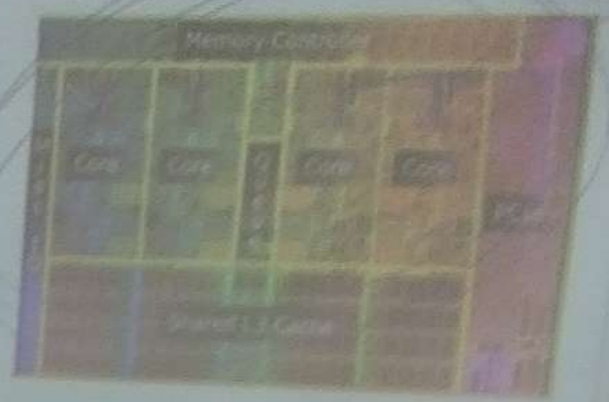

Why Multicore Processor ?

- The heart of every processor is an execution engine (processor), also known as a core.
- The core is designed to process instructions and data according to the direction of software programs in the computer's memory.
- Over the years, designers found that every new processor design had limits.
- Numerous technologies were developed to accelerate performance, including the following ones:

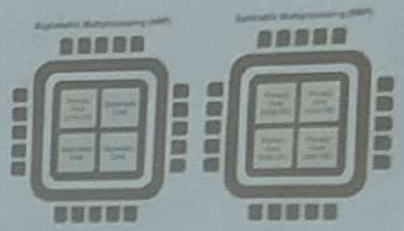

Why Multicore Processor ?

- The heart of every processor is an execution engine (processor), also known as a core.
- The core is designed to process instructions and data according to the direction of software programs in the computer's memory.
- Over the years, designers found that every new processor design had limits.
- Numerous technologies were developed to accelerate performance, including the following ones:
  - **Clock speed.** One approach was to make the processor's clock faster.
  - **Hyper-threading.** Another approach involved the handling of multiple instruction threads. *Intel calls this hyper-threading*
  - **More chips.** The next step was to add processor chips -- or dies -- to the processor package, which is the physical device that plugs into the motherboard. A dual-core processor includes two separate processor cores. A quad-core processor includes four separate cores. Today's multicore processors can easily include 12, 24 or even more processor cores.

Multicore Processors Classification

- Homogenous vs. heterogeneous multicore processors
  - Mainstream Intel and AMD multicore processors for X86 computer architectures are homogeneous and provide identical cores.
  - There is a heterogeneous multicore processor market that uses processors with different cores for different purposes. Heterogeneous cores are generally found in embedded or Arm processors that might mix microprocessor and microcontroller cores in the same package.

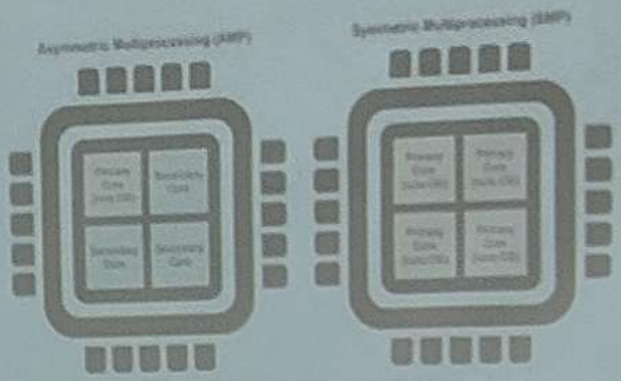

Examples of Multicore Processors

- Most modern processors designed and sold for general-purpose x86 computing include multiple processor cores.
- Examples of latest Intel 12th-generation multicore processors include the following:
  - Intel Core i9 12900 family provides 8 cores and 24 threads.
  - Intel Core i7 12700 family provides 8 cores and 20 threads.
  - Top Intel Core i5 12600K processors offer 6 cores and 16 threads.

- Examples of latest AMD Zen multicore processors include:
  - AMD Zen 3 family provides 4 to 16 cores.
  - AMD Zen 2 family provides up to 64 cores.
  - AMD Zen+ family provides 4 to 32 cores.

Multiprocessors and Multicomputers

- Multiprocessor computer
  - Execute a number of different application tasks in parallel
  - Execute subtasks of a single large task in parallel
  - All processors have access to all of the memory – shared-memory multiprocessor
  - Cost – processors, memory units, complex interconnection networks

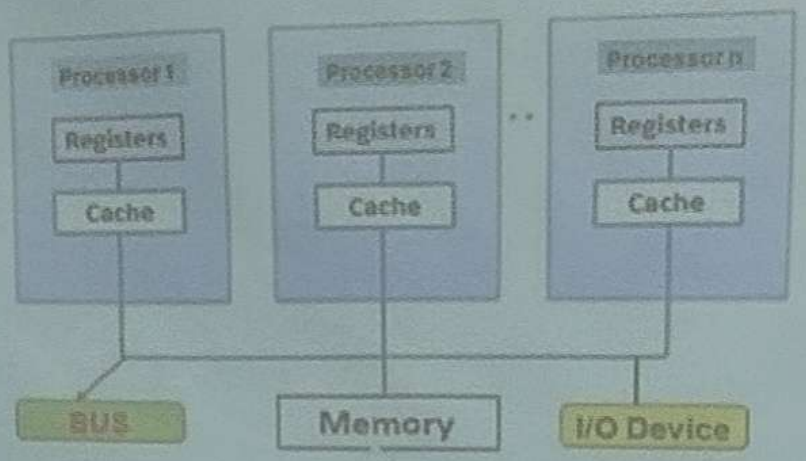

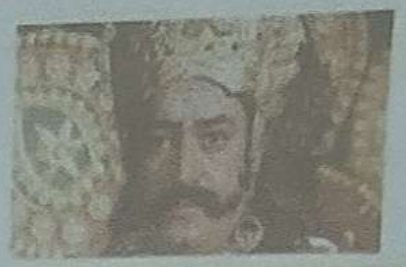

Multiprocessors and Multicomputers

- Multicomputers
  - Each computer only have access to its own memory
  - Exchange message via a communication network – message-passing multicomputers

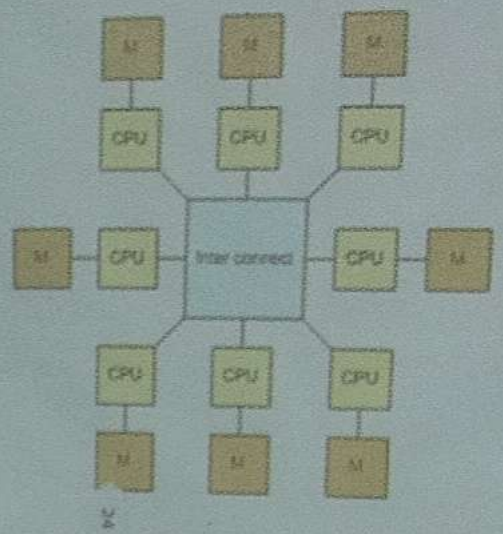

CPU Operations

- Its electronic circuitry executes instructions of a computer program, such as
  - arithmetic,
  - logic,
  - controlling, and
  - input/output (I/O) operations.

CPU Operation Phases

- The fundamental operation of most CPUs, regardless of the physical form they take, is to **run** a sequence of stored instructions that is called a ***program***.

a) **Fetch:** Fetch involves retrieving an instruction from program memory.

b) **Decode:**
- In the decode step, performed by binary decoder circuitry known as the instruction decoder,
- the instruction is converted into signals that control other parts of the CPU.

c) **Execute:**
- Depending on the CPU architecture, this may consist of a single action or a sequence of actions.
- During each action, control signals electrically enable or disable various parts of the CPU so they can perform all or part of the desired operation.

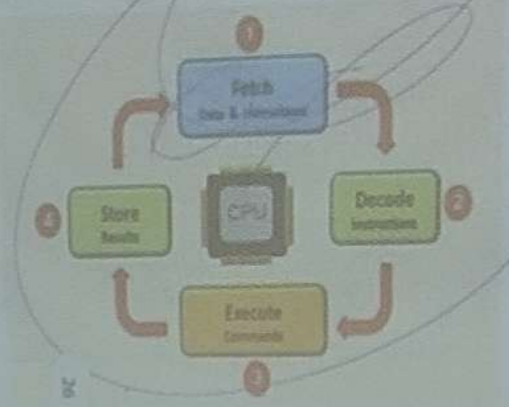

Programming Operations of Microprocessor

- Data transfer
- Arithmetic and logic
- Bit manipulation
- Loops and jumps
- Strings
- Subroutines and interrupts
- Control

The CPU Structure

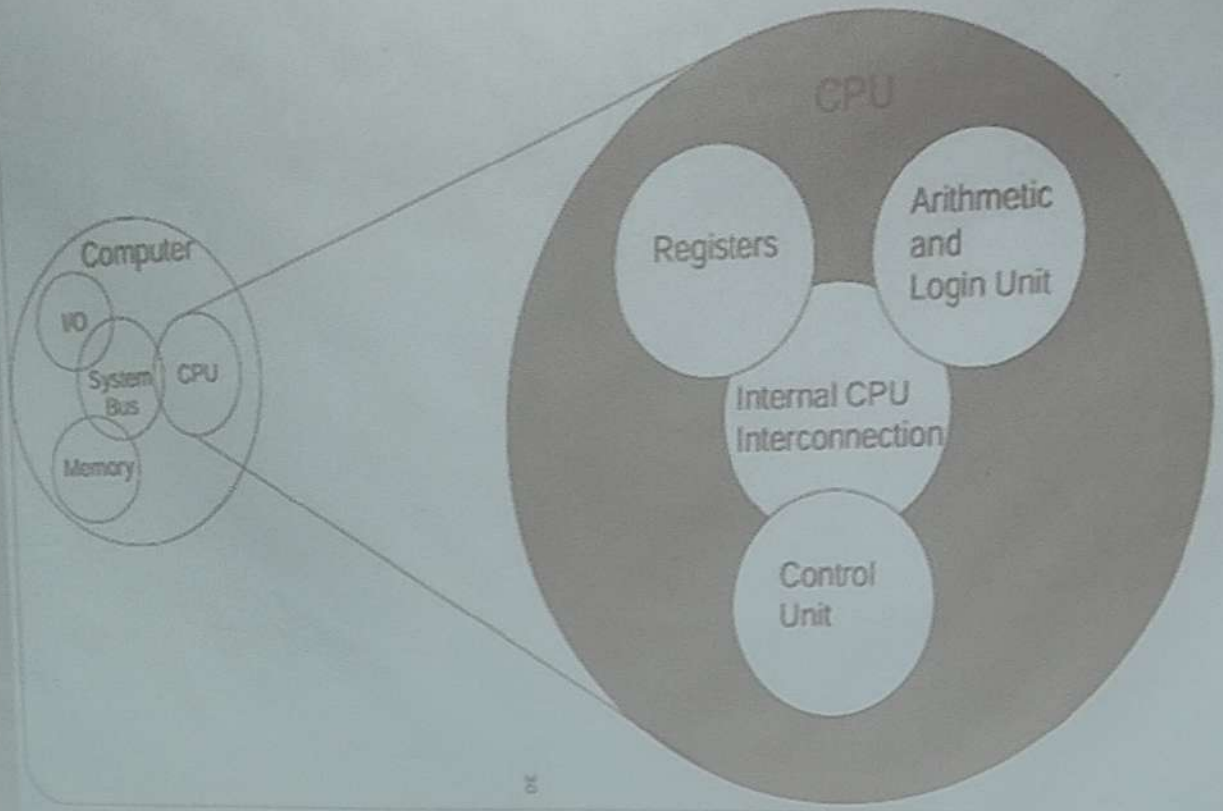

CPU Organization

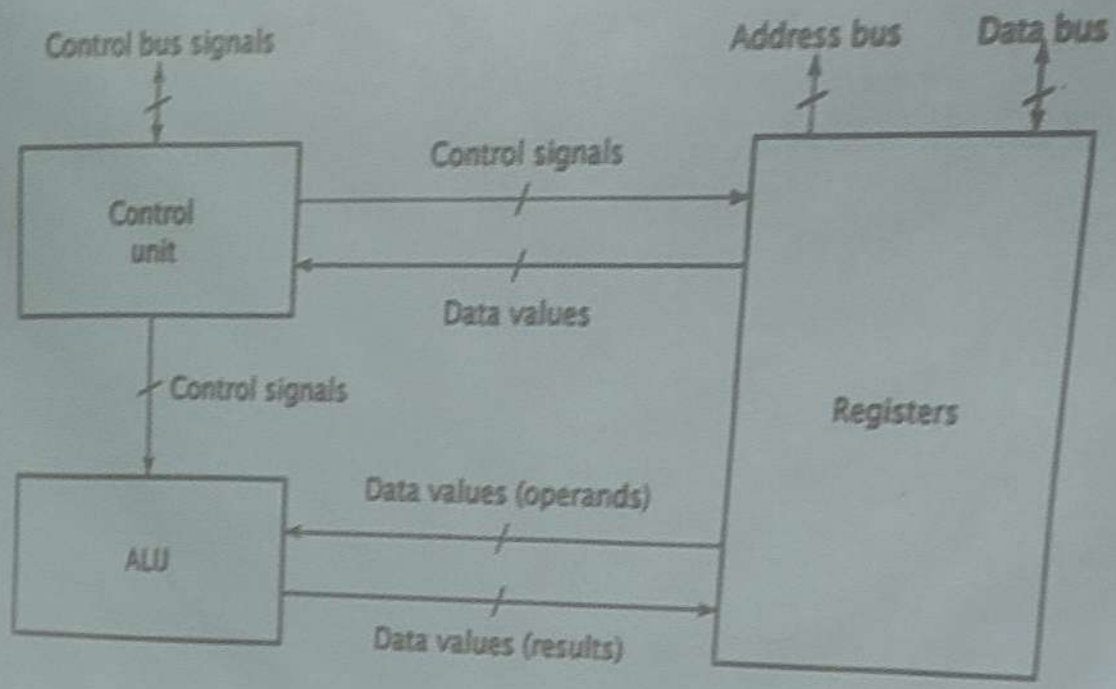

Registers

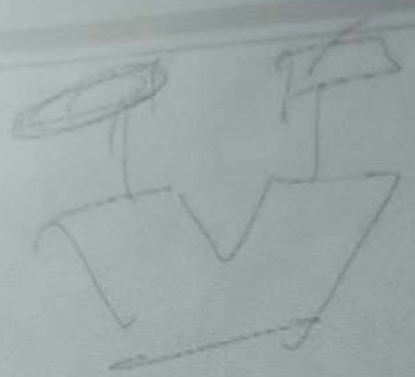

- *A register is a collection of flip-flops.*
- Single bit digital data is stored using a flip-flop.
- By combining many flip-flops, the storage capacity can be extended to accommodate a huge number of bits.
- *We must utilize an n-bit register with n flip flops if we wish to store an n-bit word.*
- Registers are a type of computer memory used to quickly accept, store, and transfer data and instructions that are being used immediately by the CPU.
- The registers used by the CPU are often termed as *Processor registers*.
- These registers are very fast computer memory which are used to execute programs and operations efficiently.
- A register should be 32/64 bits in length for a 32/64-bit instruction computer.

Classification of Register

- There are several different classes of CPU registers which works in coordination with the computer memory to run operations efficiently.
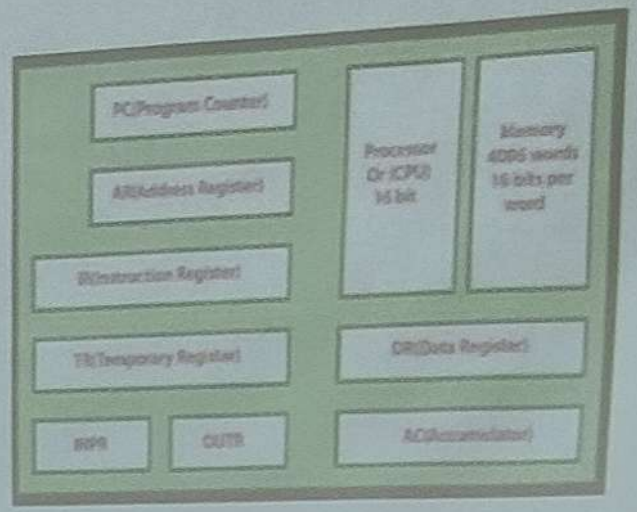
a) General-purpose register ($R_0 - R_{n-1}$)
b) Accumulator
c) Instruction register (IR)
d) Program counter (PC)
e) Memory address register (MAR)
f) Memory data register (MDR)
g) Condition code register (CCR)