12:57 PM Thu 23 Jan

All tools · Edit Export E-Sign

Computer Organization and Architecture
(Code: CS256)

Lecture-6: Computer CPU- Registers

Course Faculty

Dr. B. R. Bhowmik

Assistant Professor

Dept. of CSE

Website: https://sites.google.com/view/biswajitrbhowmik
https://sites.google.com/view/vicayana-gaveshana

Course Email: sangsangstha@gmail.com

12:57 PM Thu 23 Jan
100%
All tools · Edit Export E-Sign

Computer Structure - Top Level

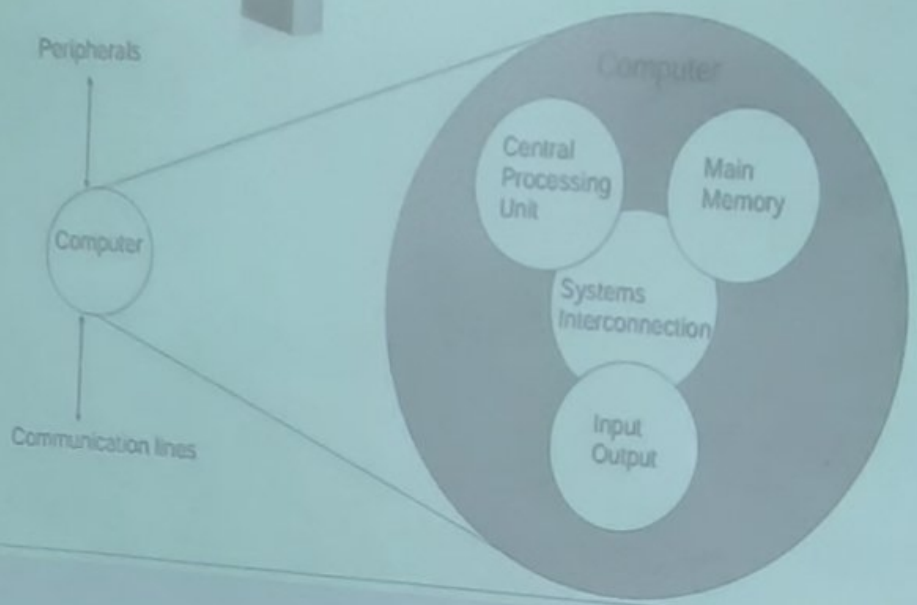

12:58 PM Thu 23 Jan
100%
All tools · Edit Export E-Sign

The CPU Structure

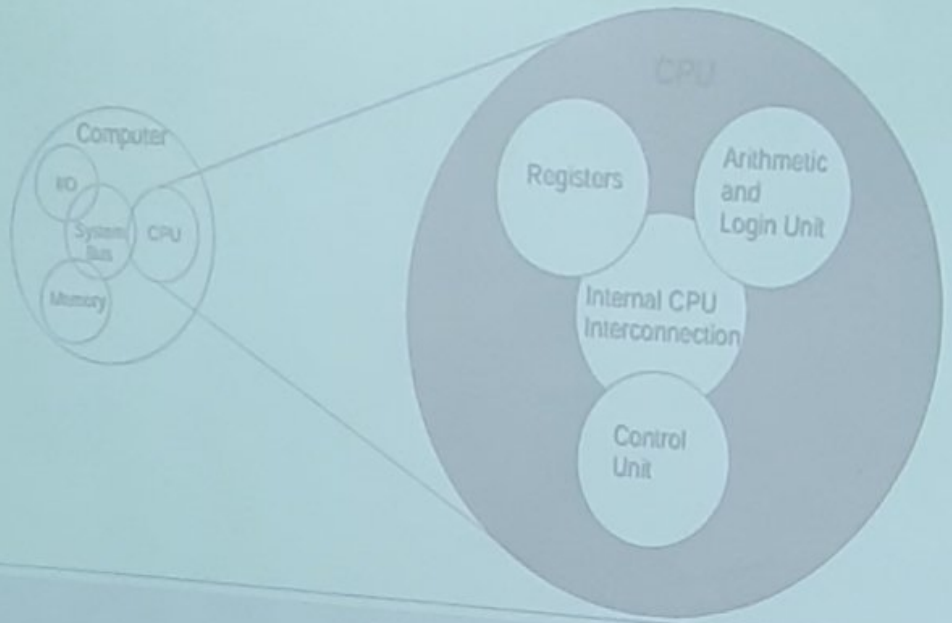

12:59 PM Thu 23 Jan

100%

All tools · Edit Export E-Sign

CPU REGISTERS AND THEIR FUNCTIONS

1. INTRODUCTION TO CPU REGISTERS

2. COLLABORATION WITH OTHER CPU COMPONENTS

3. COMPARISON WITH CACHE MEMORY

4. IMPORTANCE OF SPECIAL-PURPOSE REGISTERS

6

46

1:00 PM Thu 23 Jan
All tools · Edit Export E-Sign

CPU Registers

- *A register is a collection of flip-flops.*
- Single bit digital data is stored using a flip-flop.
- By combining many flip-flops, the storage capacity can be extended to accommodate a huge number of bits.
- *We must utilize an n-bit register with n flip flops if we wish to store an n-bit word.*
- Registers are a type of computer memory used to quickly accept, store, and transfer data and instructions that are being used immediately by the CPU.
- *The registers used by the CPU are often termed as* **Processor registers.**
- These registers are very fast computer memory which are used to execute programs and operations efficiently.
- A register should be 32/64 bits in length for a 32/64-bit instruction computer.

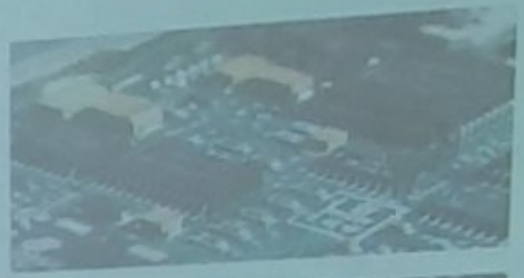

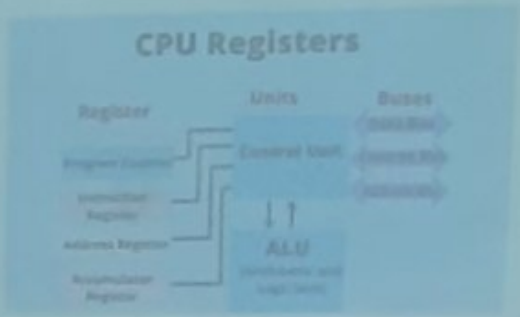

1:01PM Thu 23 Jan
All tools · Edit Export E-Sign
100%

Why CPU Registers?

- Computer registers are small storage areas inside the CPU.
- *Computer registers are memory storing units that operate at high speed.*
- *They hold data temporarily while the CPU processes instructions.*
- In most cases, the number of bits that a register can hold is used to determine its size.
- *Registers help the CPU work faster by providing quick access to important information needed for calculations and operations.*

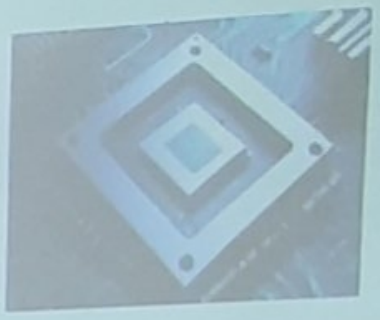

- *Thus, Registers are used by computers for various purposes, including*
  - *Storing program instructions before they're executed or holding intermediate results from calculations so that their values can be retrieved later on if needed.*
  - *They also help speed up processes by allowing processors to access frequently used values without having to retrieve them from main memory every time they need them.*

1:07 PM Thu 23 Jan

All tools · Edit Export E-Sign

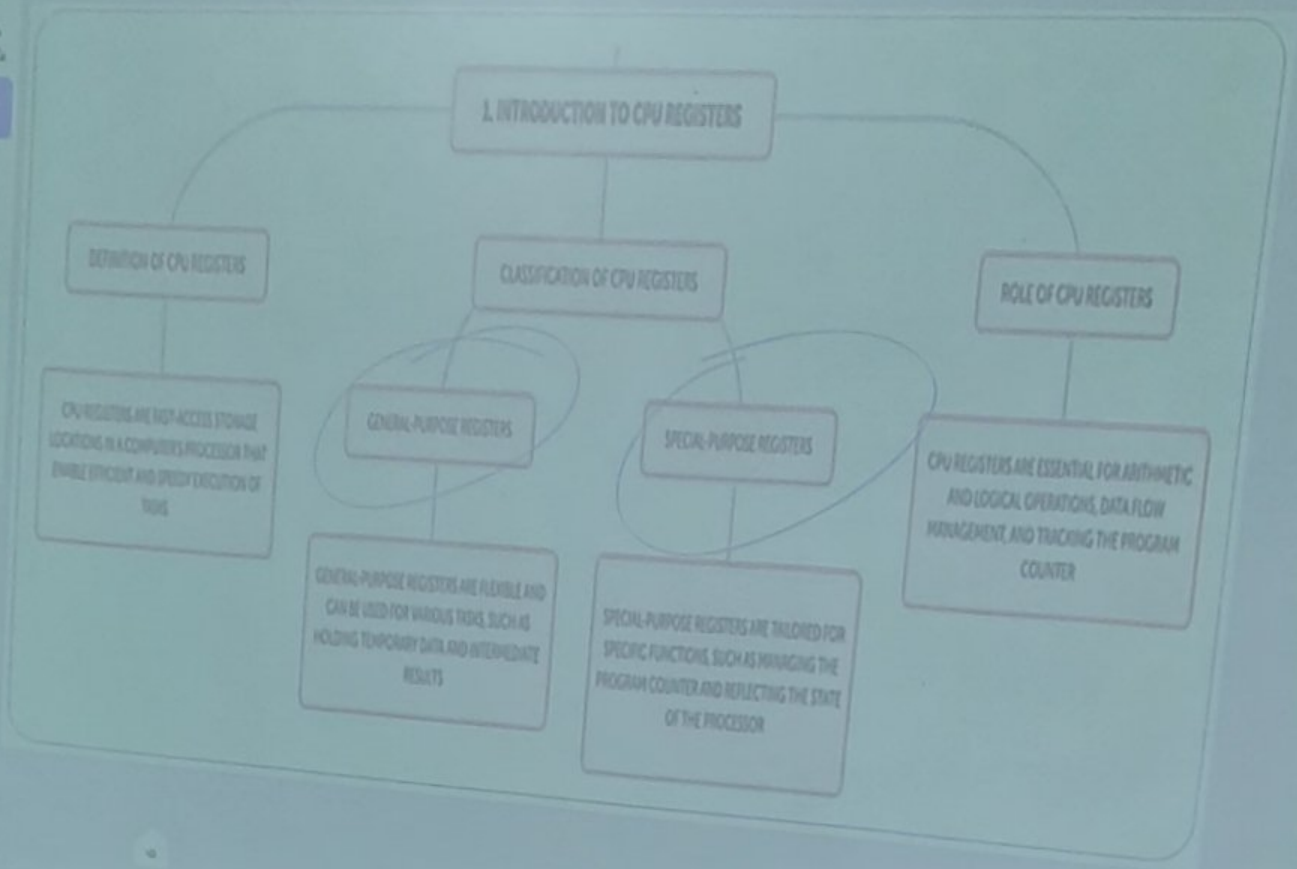

45

1:08 PM Thu 23 Jan
All tools Edit Export E-Sign
99%

Classification of Register

- There are several different classes of CPU registers which works in coordination with the computer memory to run operations efficiently.
  a) General-purpose register ($R_0 - R_{n-1}$)
  b) Special Purpose Registers
     - Accumulator
     - Instruction register (IR)
     - Program counter (PC)
     - Memory address register (MAR)
     - Memory data register (MDR)
     - Condition code register (CCR)

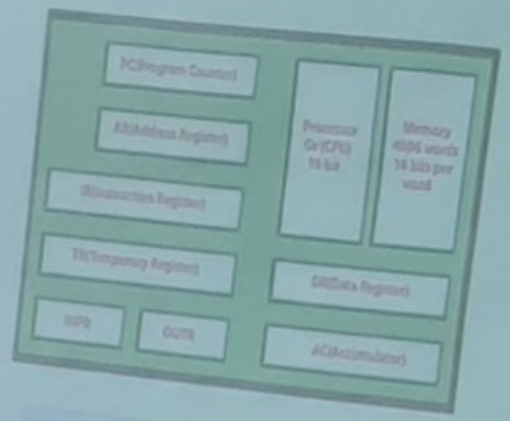

CPU REGISTERS	
REGISTER	SYMBOL
Program Counter	PC
Instruction Register	IR
Accumulator Register	AC
Memory Buffer Register	MBR
Memory Address Register	MAR

10
46

General Purpose Register

- *General purpose registers (GPRs) are the CPU registers that are used for either memory address or data whenever needed.*
- These are mainly used for holding the following:
  - Operands for logical and arithmetic operations
  - Operands for address calculation
  - Memory pointers
- There are 3 types of General-purpose registers
  - Data registers
  - Pointer registers
  - Index registers

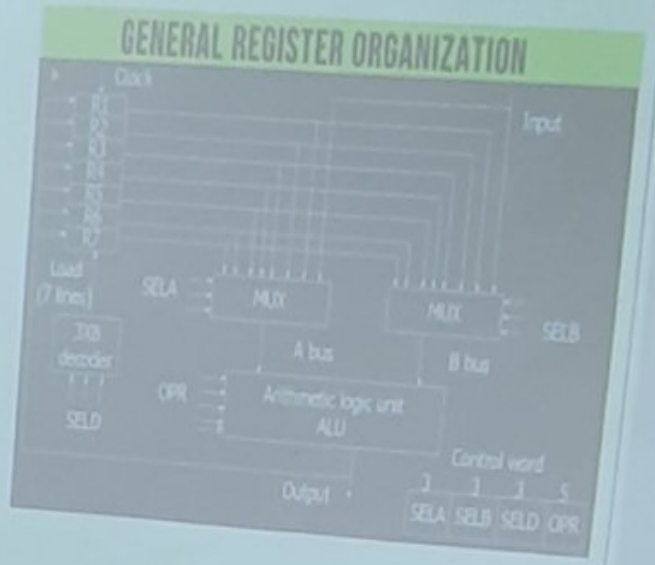

GPR: Example

- Let us consider an 8086 processor.
- There are eight general purpose register in 8086 microprocessor.

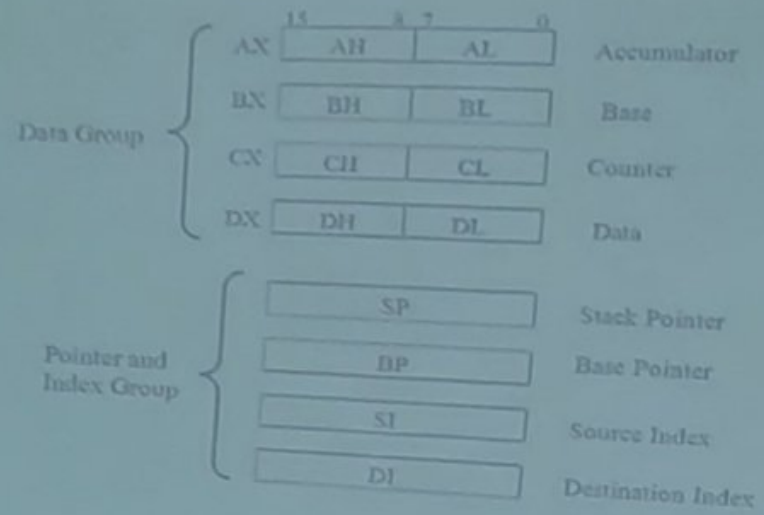

1:18 PM Thu 23 Jan
All tools Edit Export E-Sign
95%

Accumulator

- *Accumulator (AC) Register is a general purpose Register.*
- *An accumulator register is a memory location or register that stores the results of arithmetic and logical operations.*
- *This is the most frequently used register used to store data taken from memory.*
- This Register is required for doing different CPU operations on data.
- As this register holds the initial data to be operated on, the intermediate result and the final result of processing operation.
- *Means the result of arithmetic operation are transfer to AC if no specific address of result operation is specified.*
- And the number of bits that accumulator register contain is equal to the number of bits per word.
- That is, if word is of n bits, the AC is also of n bits.
- It is in different numbers in different microprocessors.

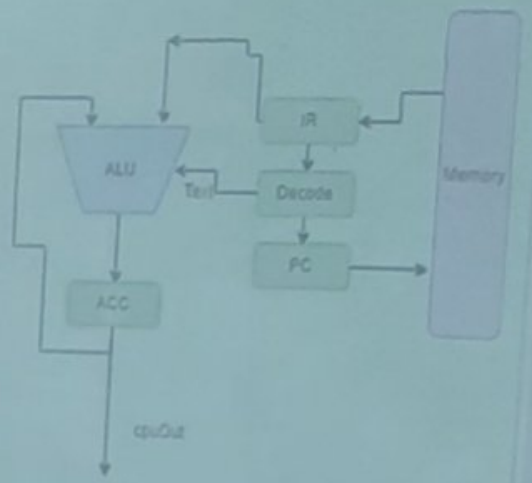

Instruction Register

- Instruction Register(IR) is used for storing the instruction.
- *Means the instruction register hold the current instruction that is being executed, or just about to be executed.*
- *The instruction register (IR) is a register in a CPU's control unit that holds the instruction that is currently being executed or decoded.*
- The instruction from PC is fetched and stored in IR.
- As soon as the instruction in placed in IR, the CPU starts executing the instruction.
- Since it contains instruction, so, the no. of bits (size) of Instruction Register is equal to the no. of bits of instruction,
- The size of instruction is n bit for n-bit CPU.

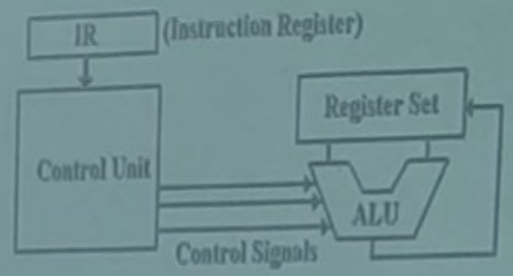

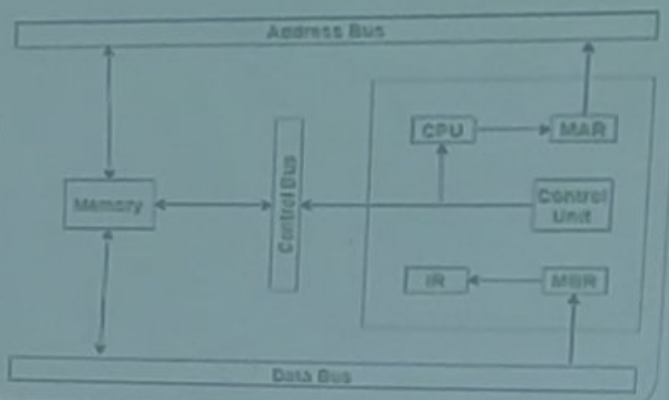

1:23 PM Thu 23 Jan

All tools · Edit Export E-Sign

Program Counter

- A program counter (PC) is a register in a CPU that keeps track of the memory address of the next instruction to be executed.
- It's also known as the instruction pointer
- Program Counter generally acts as a pointer which points to the memory location where the next instruction is stored.
- The no. of bits in PC, that is, the size of PC is equal to the width of the memory address.
- It also functions to count the number of instructions.
- The incrementation of PC depends on the type of architecture being used.
- If we are using 32-bit architecture, the PC gets incremented by 4 every time to fetch the next instruction.

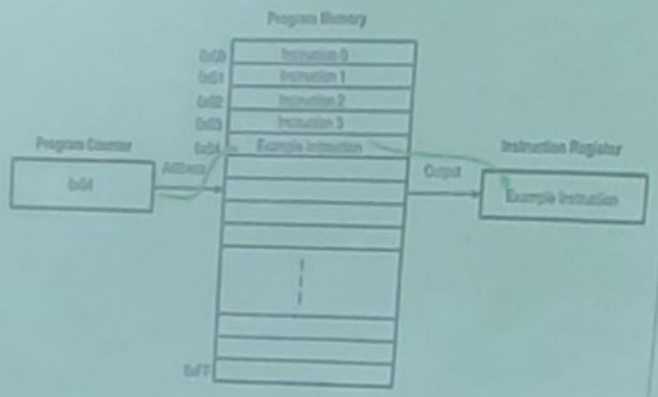

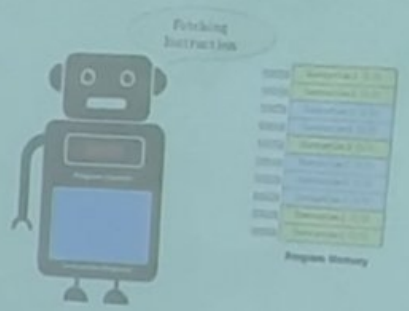

L INSTITUTE OF TECHNOLOGY KARNA
Surathkal, Mangalore 575 025
VISION
e transformation of students
an beings, responsible citizens
t professionals, focusing
n, generation and dissemination
MISSION
lity education to
and society,
-learning and res
d develop talent
ource, and provid
to innovation,
reneurial le
ffecti
nts
ndu
rs.
ethic
ity.

1:24 PM Thu 23 Jan
All tools · Edit Export E-Sign

Memory Address Register

- *The memory address register (MAR) is the CPU register that either stores the memory address from which data will be fetched to the CPU registers, or the address to which data will be sent and stored via system bus.*
- It holds the address of the location to be accessed from memory.
- MAR and MDR (Memory Data Register) together facilitate the communication of the CPU and the main memory.
- When reading from memory, data addressed by MAR is fed into the MDR (memory data register) and then used by the CPU.
- When writing to memory, the CPU writes data from MDR to the memory location whose address is stored in MAR.
- MAR, which is found inside the CPU, goes either to the RAM (random-access memory) or cache.

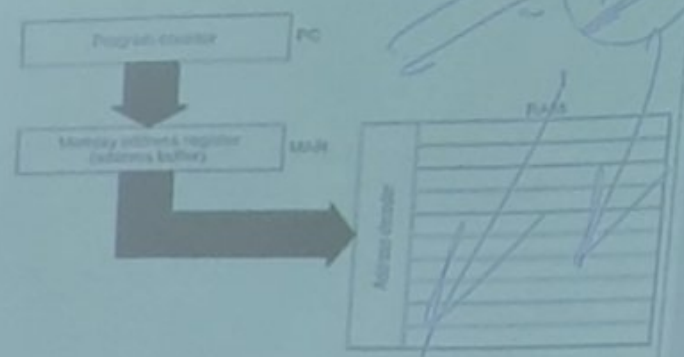

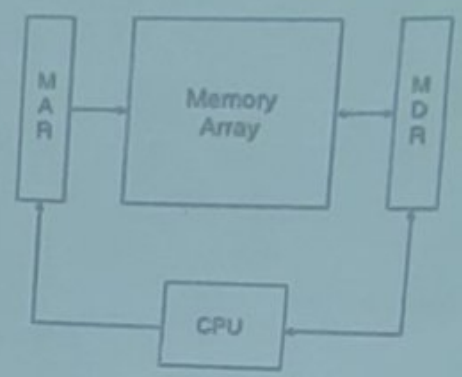

1:28 PM Thu 23 Jan
All tools · Edit Export E-Sign
92%

Memory Data Register

- It contains data to be written into or to be read out from the addressed location.
- It contains a copy of the value in the memory location specified by the memory address register.
- *It acts as a buffer, allowing the processor and memory units to act independently without being affected by minor differences in operation.*
- *Also known as a memory buffer register (MBR).*
- The MDR is a two-way register.
  - Way-1: When data is fetched from memory and placed into the MDR, it is written to go in one direction.
  - Way-2: When there is a write instruction, the data to be written is placed into the MDR from another CPU register, which then puts the data into memory.

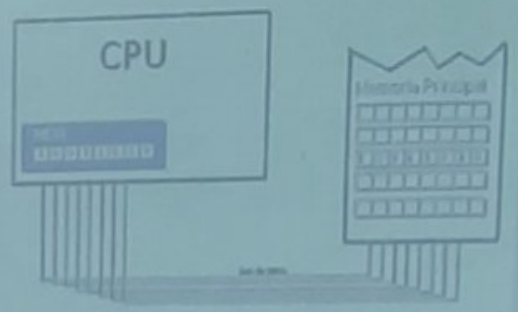

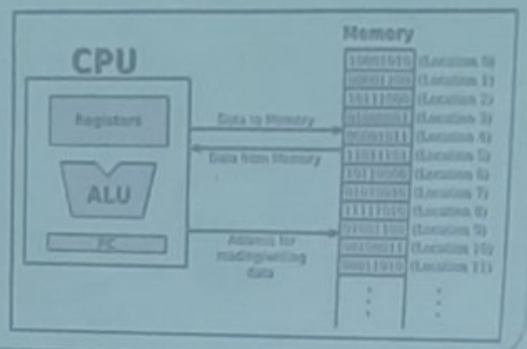

Condition Code Register

- A condition code register (CCR) is a collection of status flag bits for a processor.
- *Known as status register, or flag register* too.
- Example
  - Z --> Zero flag
  - C --> Carry flag

15	14	13	12	11	10	9	8	7	6	5	4	3	2	1	0
X	X	X	X	O	D	I	T	S	Z	X	Ac	X	P	X	Cy

O – Overflow flag
D – Direction flag
I – Interrupt flag
T – Trap flag
S – Sign flag
Z – Zero flag
Ac – Auxiliary carry flag
P – Parity flag
Cy – Carry flag
X – Not used

Flags

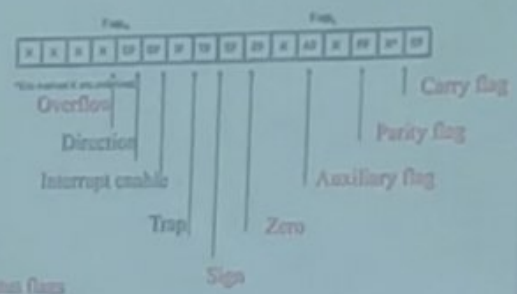

6 are status flags
3 are control flag

1:35 PM Thu 23 Jan
All tools · Edit Export E-Sign

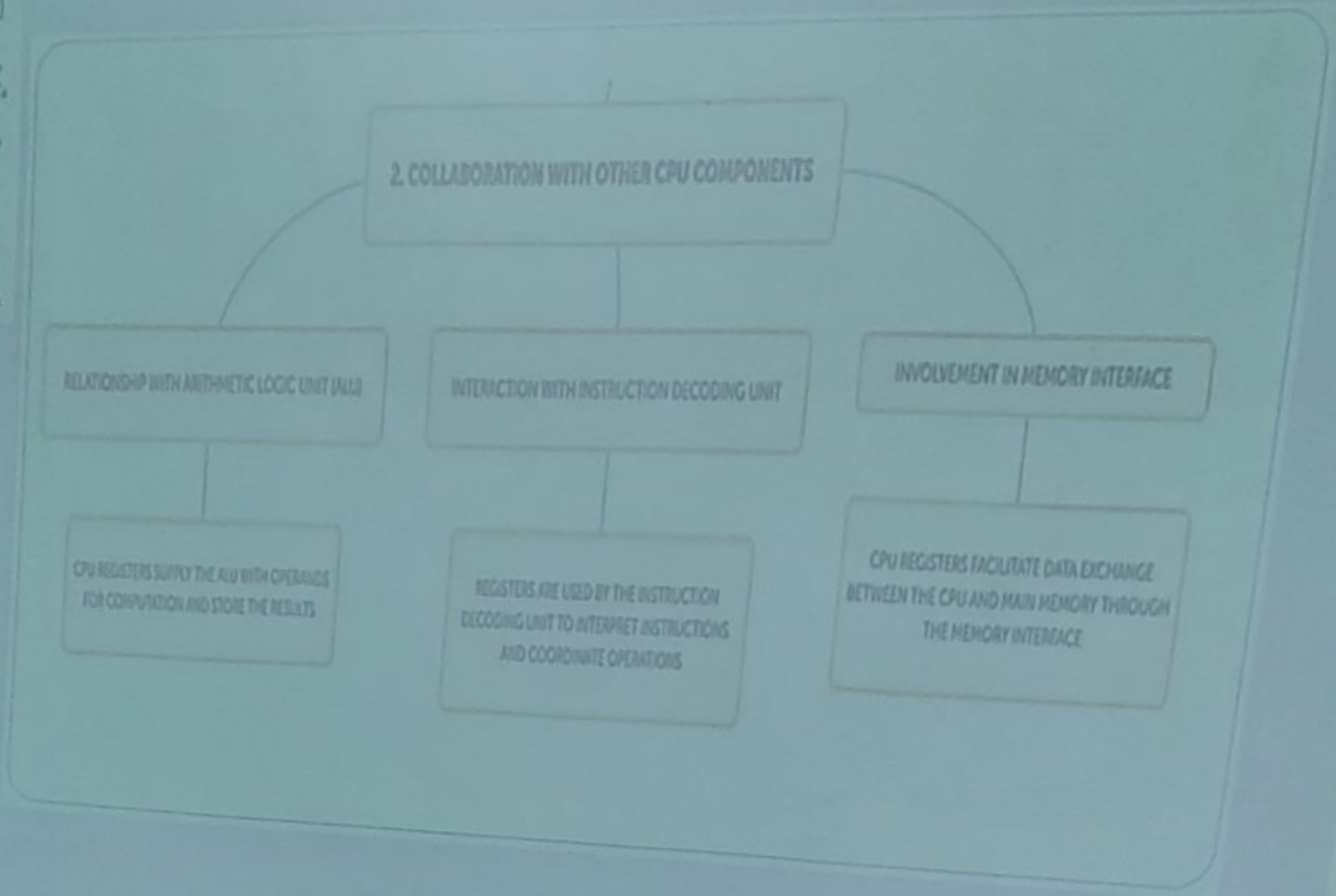

1:06 PM Thu 23 Jan
All tools Edit Export E-Sign

Functionality of Registers

Register symbol	Register Name	Number of Bits	Function
AC	Accumulator	16	It's a processor register.
AR	Address register	12	It stores an address for memory.
DR	Data Register	16	It stores a memory operand.
INPR	Input register	8	It stores input characters.
IR	Instruction Register	16	It stores an instruction code.
OUTR	Output register	8	It carries output characters.
PC	Program Counter	12	It stores the address of the instruction.
TR	Temporary Register	16	It stores temporary data.