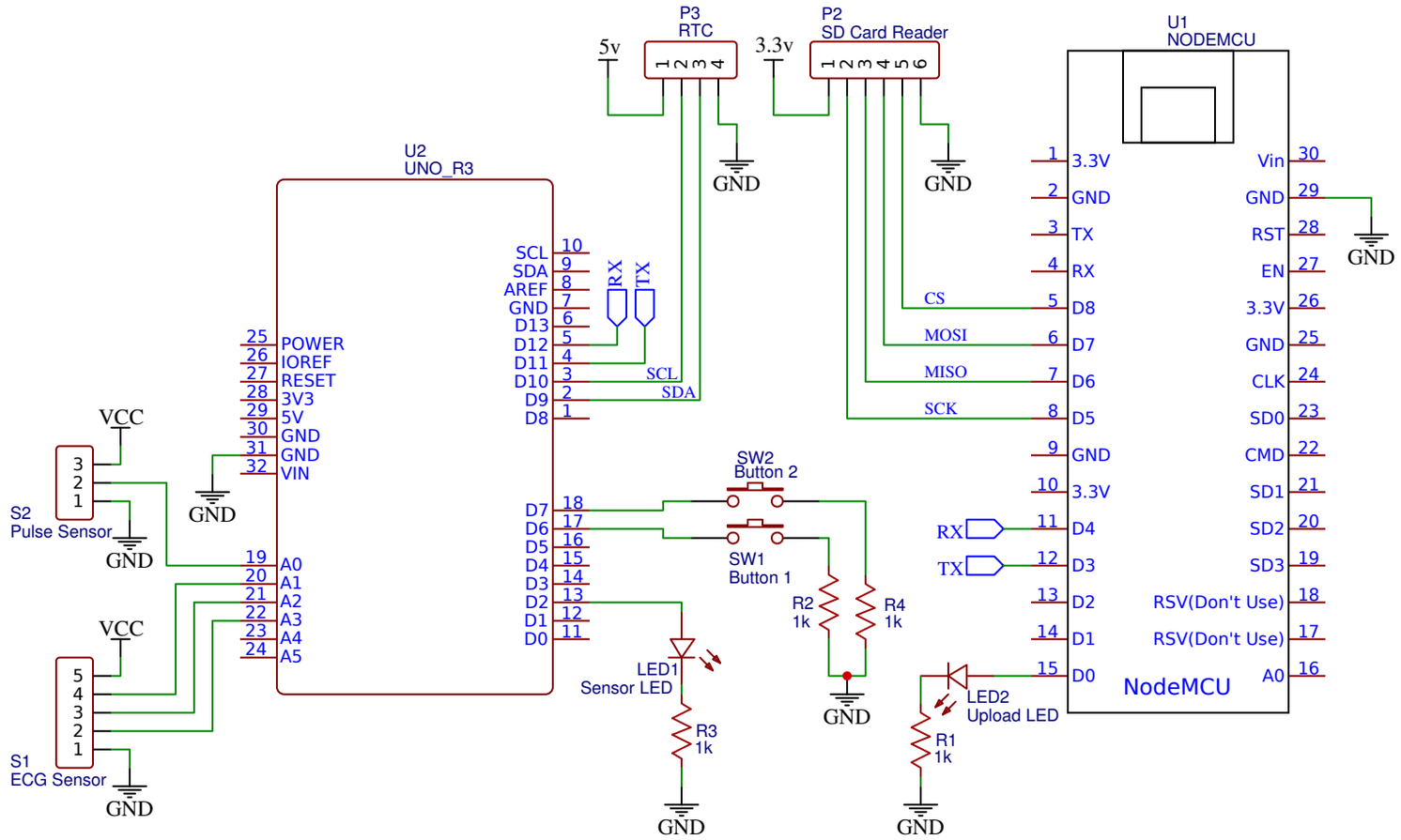

TITLE: Healtkit		REV: 1.0
	Company: Nexus	Sheet: 1/1
	Date: 2019-04-23 Drawn By: sriharshamvs	