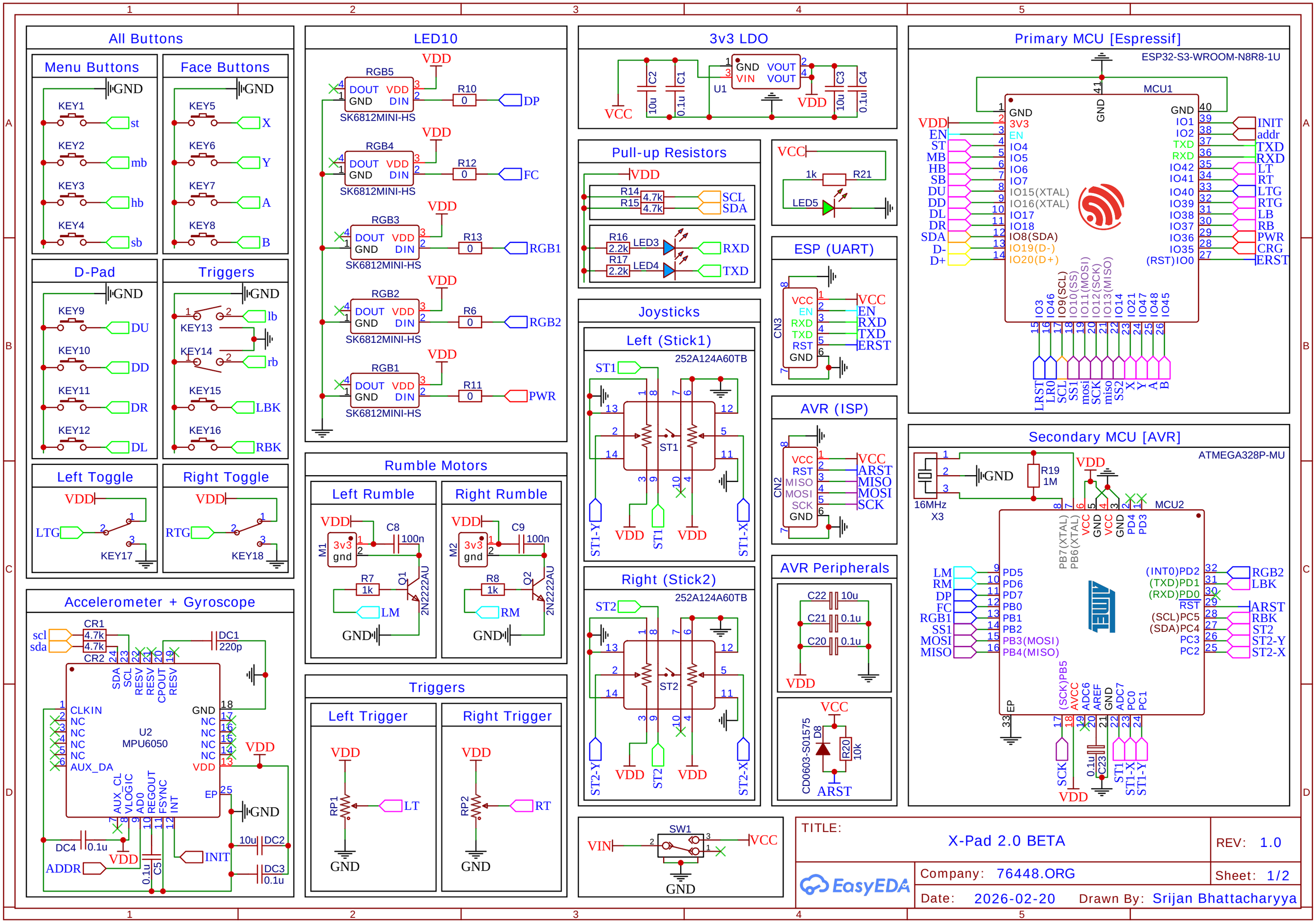
All Buttons
Menu Buttons
Face Buttons
D-Pad
Triggers
Left Toggle
Right Toggle
LED10
Rumble Motors
Left Rumble
Right Rumble
Triggers
Left Trigger
Right Trigger
Accelerometer + Gyroscope
U2
MPU6050
3v3 LDO
Pull-up Resistors
Joysticks
Left (Stick1)
Right (Stick2)
252A124A60TB
ESP (UART)
AVR (ISP)
AVR Peripherals
Primary MCU [Espressif]
ESP32-S3-WROOM-N8R8-1U
MCU1
Secondary MCU [AVR]
ATMEGA328P-MU
MCU2
TITLE:
X-Pad 2.0 BETA
REV: 1.0
Company: 76448.ORG
Sheet: 1/2
Date: 2026-02-20
Drawn By: Srijan Bhattacharyya
EasyEDA

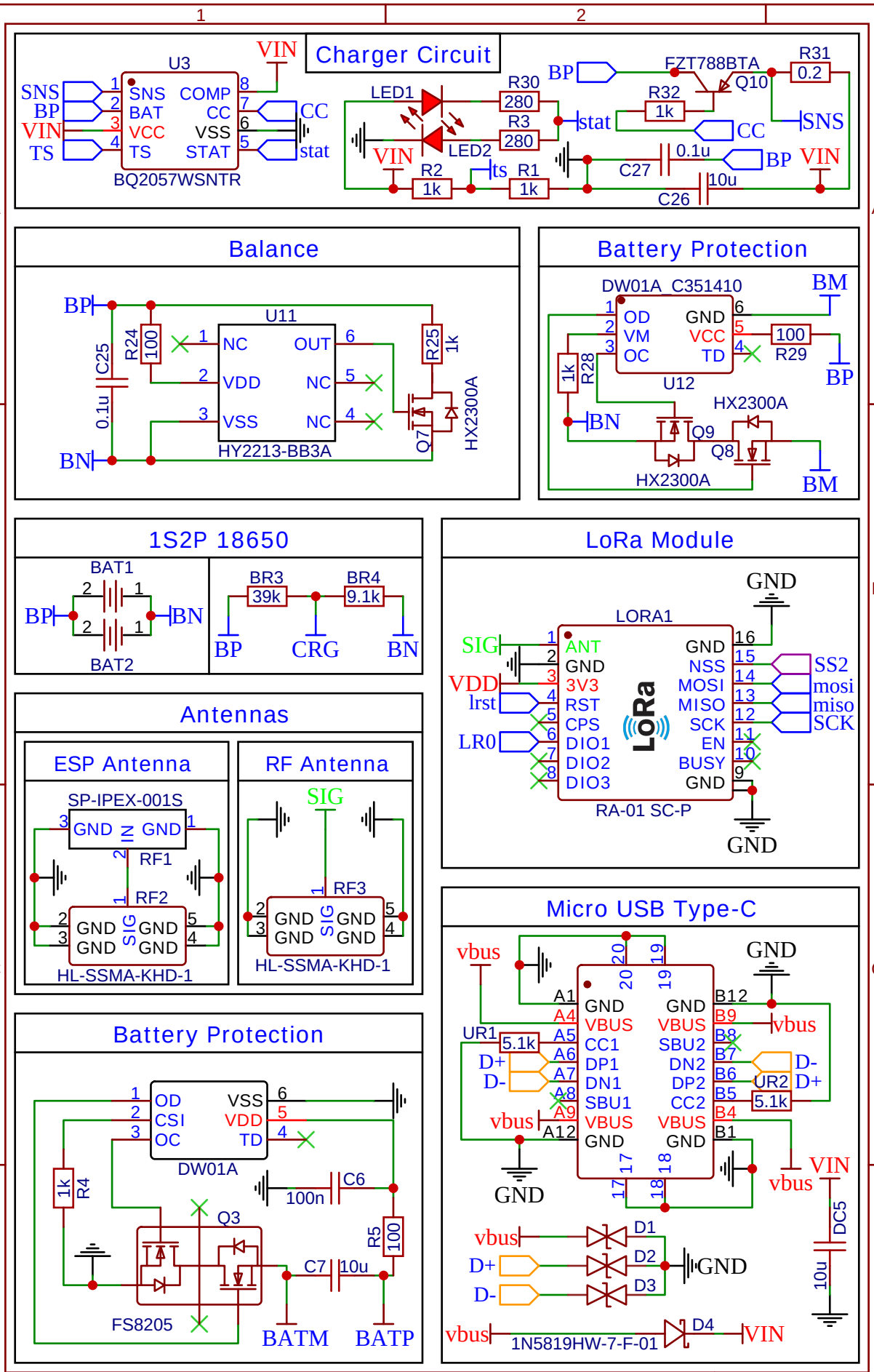

TITLE: X-Pad 2.0 BETA

REV: 1.0

Company: 76448.ORG

Sheet: 2/2

Date: 2025-11-03

Drawn By: Srijan Bhattacharyya