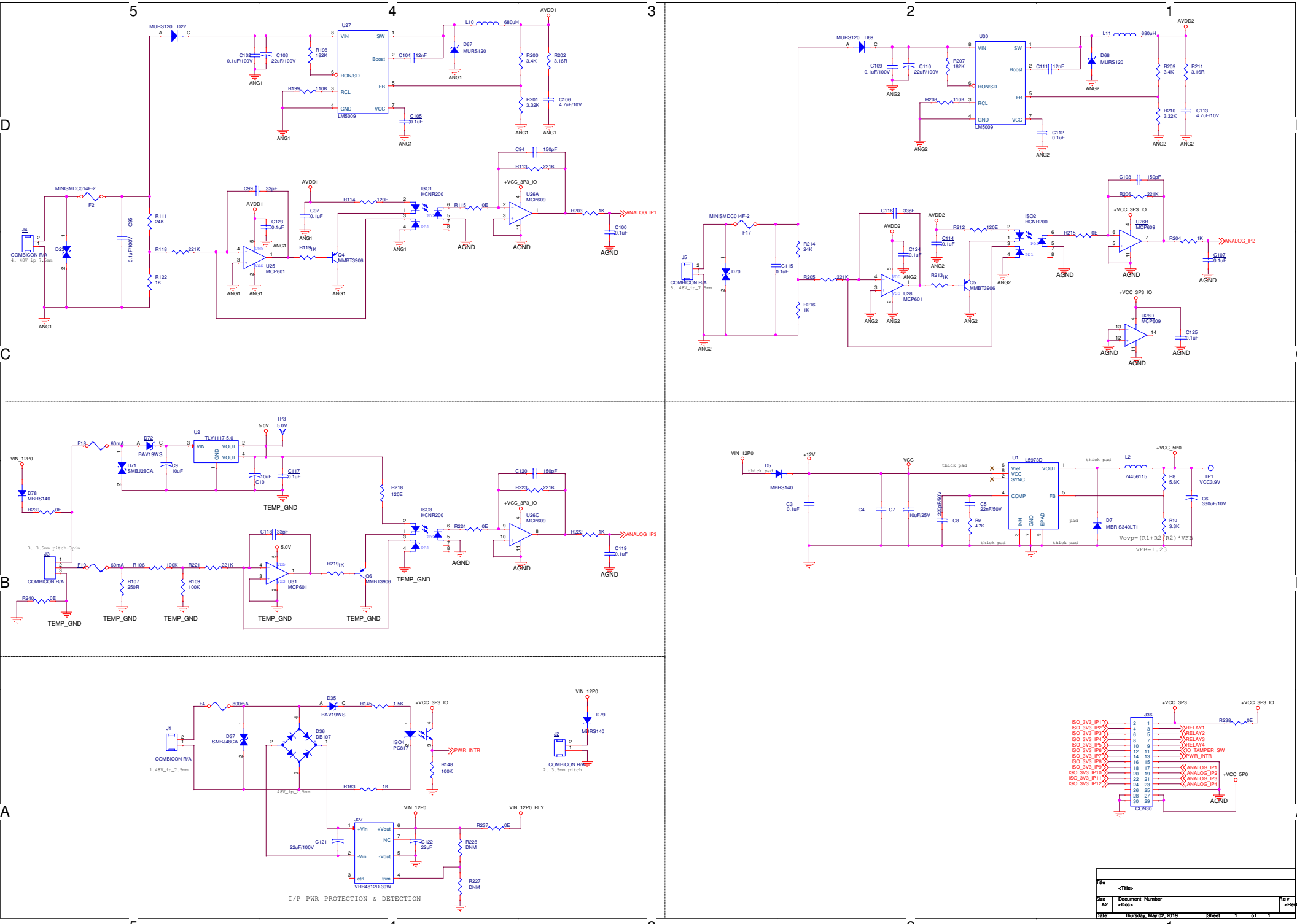

Title	<Title>
Size A2	Document Number <Doc>
Rev	<Rev>
Date: Thursday, May 02, 2019	Sheet 1 of 1

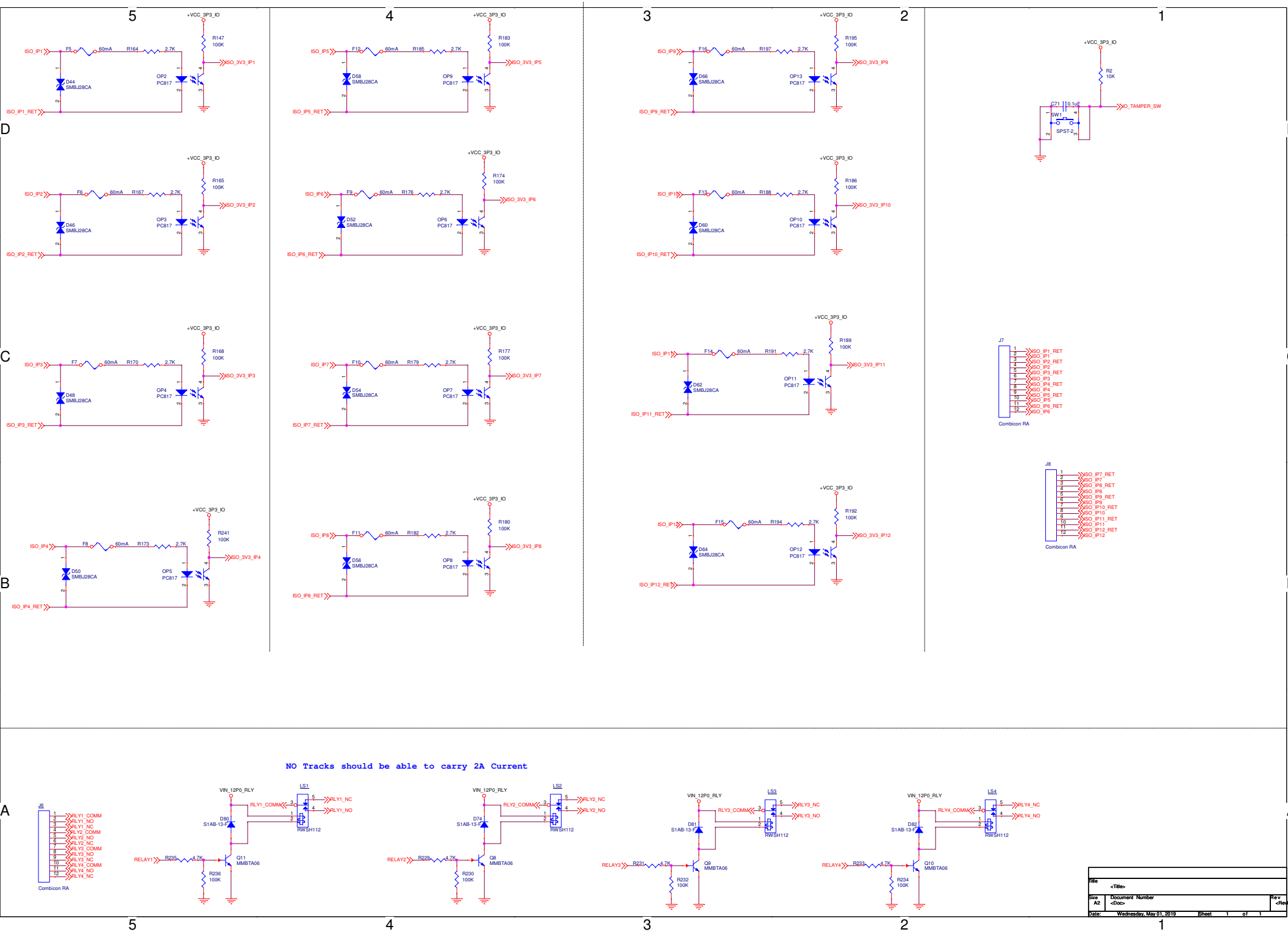
NO Tracks should be able to carry 2A Current
+VCC_3P3_IO
ISO_IP1 F5 60mA R164 2.7K
R147 100K
ISO_3V3_IP1
D44 SMBJ28CA
OP2 PC817
ISO_IP1_RET
ISO_IP2 F6 60mA R167 2.7K
R165 100K
ISO_3V3_IP2
D46 SMBJ28CA
OP3 PC817
ISO_IP2_RET
ISO_IP3 F7 60mA R170 2.7K
R168 100K
ISO_3V3_IP3
D48 SMBJ28CA
OP4 PC817
ISO_IP3_RET
ISO_IP4 F8 60mA R173 2.7K
R241 100K
ISO_3V3_IP4
D50 SMBJ28CA
OP5 PC817
ISO_IP4_RET
ISO_IP5 F12 60mA R185 2.7K
R183 100K
ISO_3V3_IP5
D58 SMBJ28CA
OP9 PC817
ISO_IP5_RET
ISO_IP6 F9 60mA R176 2.7K
R174 100K
ISO_3V3_IP6
D52 SMBJ28CA
OP6 PC817
ISO_IP6_RET
ISO_IP7 F10 60mA R179 2.7K
R177 100K
ISO_3V3_IP7
D54 SMBJ28CA
OP7 PC817
ISO_IP7_RET
ISO_IP8 F11 60mA R182 2.7K
R180 100K
ISO_3V3_IP8
D56 SMBJ28CA
OP8 PC817
ISO_IP8_RET
ISO_IP9 F16 60mA R197 2.7K
R195 100K
ISO_3V3_IP9
D66 SMBJ28CA
OP13 PC817
ISO_IP9_RET
ISO_IP10 F13 60mA R188 2.7K
R186 100K
ISO_3V3_IP10
D60 SMBJ28CA
OP10 PC817
ISO_IP10_RET
ISO_IP11 F14 60mA R191 2.7K
R189 100K
ISO_3V3_IP11
D62 SMBJ28CA
OP11 PC817
ISO_IP11_RET
ISO_IP12 F15 60mA R194 2.7K
R192 100K
ISO_3V3_IP12
D64 SMBJ28CA
OP12 PC817
ISO_IP12_RET
R2 10K
C71 0.1uF
SW1 SPST-2
ISO_TAMPER_SW
J7
ISO_IP1_RET
ISO_IP1
ISO_IP2_RET
ISO_IP2
ISO_IP3_RET
ISO_IP3
ISO_IP4_RET
ISO_IP4
ISO_IP5_RET
ISO_IP5
ISO_IP6_RET
ISO_IP6
Combicon RA
J8
ISO_IP7_RET
ISO_IP7
ISO_IP8_RET
ISO_IP8
ISO_IP9_RET
ISO_IP9
ISO_IP10_RET
ISO_IP10
ISO_IP11_RET
ISO_IP11
ISO_IP12_RET
ISO_IP12
Combicon RA
J6
RLY1_COMM
RLY1_NO
RLY1_NC
RLY2_COMM
RLY2_NO
RLY2_NC
RLY3_COMM
RLY3_NO
RLY3_NC
RLY4_COMM
RLY4_NO
RLY4_NC
Combicon RA
VIN_12P0_RLY
LS1
LS2
LS3
LS4
RWSH112
D80 S1AB-13-F
D74 S1AB-13-F
D81 S1AB-13-F
D82 S1AB-13-F
RELAY1 R235 4.7K
Q11 MMBTA06
R236 100K
RELAY2 R229 4.7K
Q8 MMBTA06
R230 100K
RELAY3 R231 4.7K
Q9 MMBTA06
R232 100K
RELAY4 R233 4.7K
Q10 MMBTA06
R234 100K
Title
<Title>
Size A2
Document Number
<Doc>
Rev
<Rev>
Date: Wednesday, May 01, 2019
Sheet 1 of 1