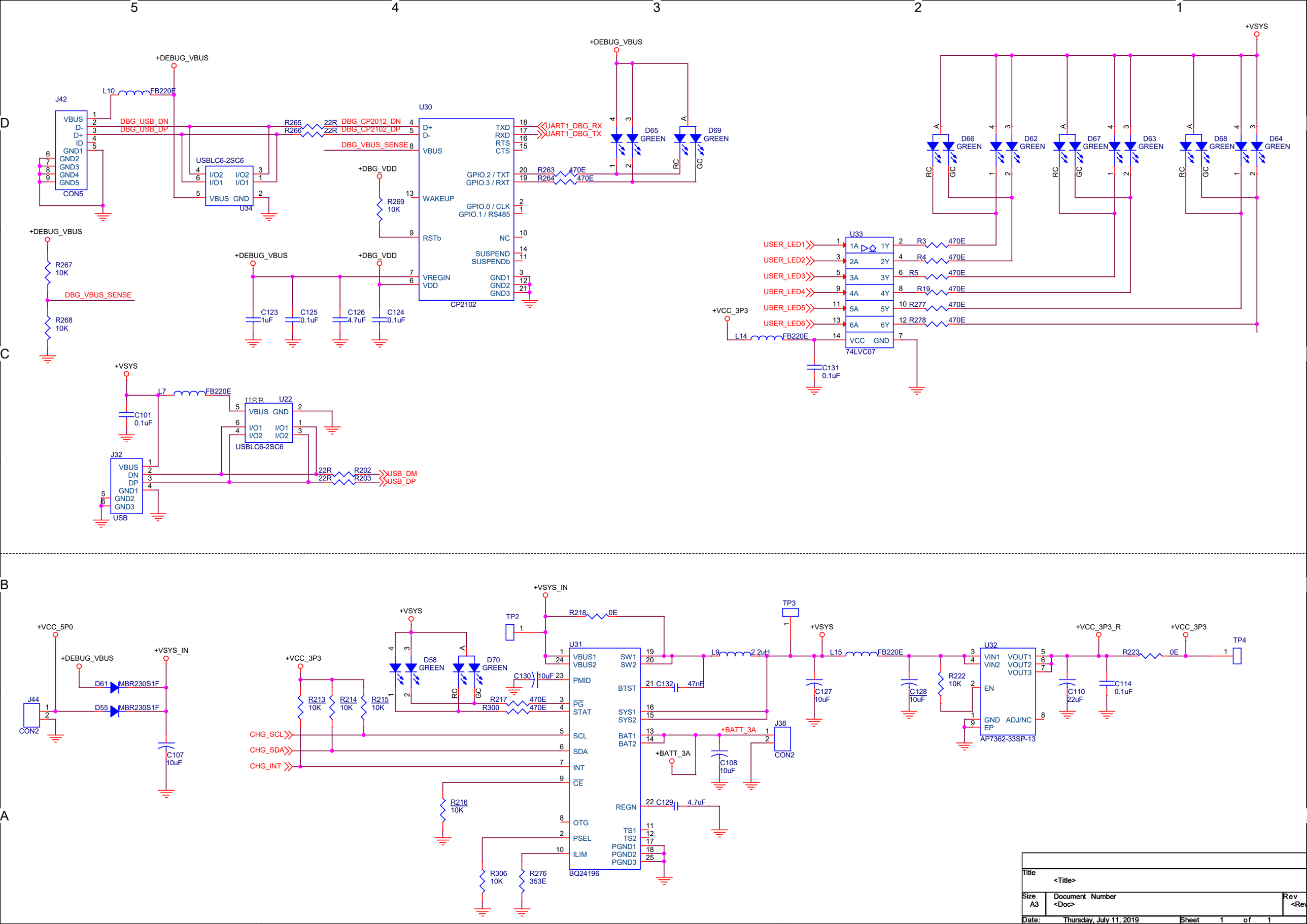

Title	<Title>
Size A3	Document Number <Doc>
Rev	<Rev
Date: Thursday, July 11, 2019	Sheet 1 of 1

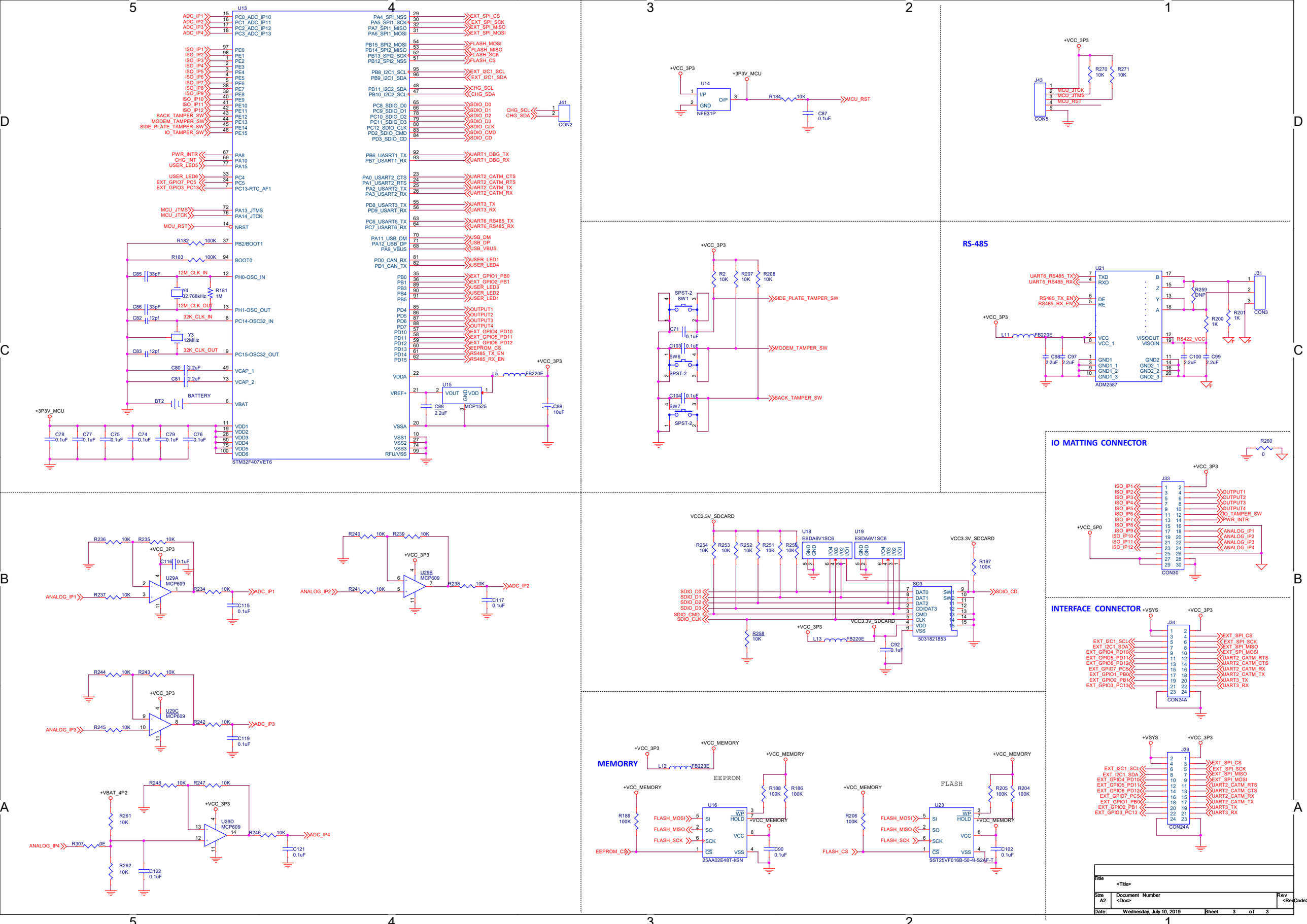

Title	<Title>
Size A2	Document Number <Doc>
Rev	<RevCode>
Date: Wednesday, July 10, 2019	Sheet 3 of 3