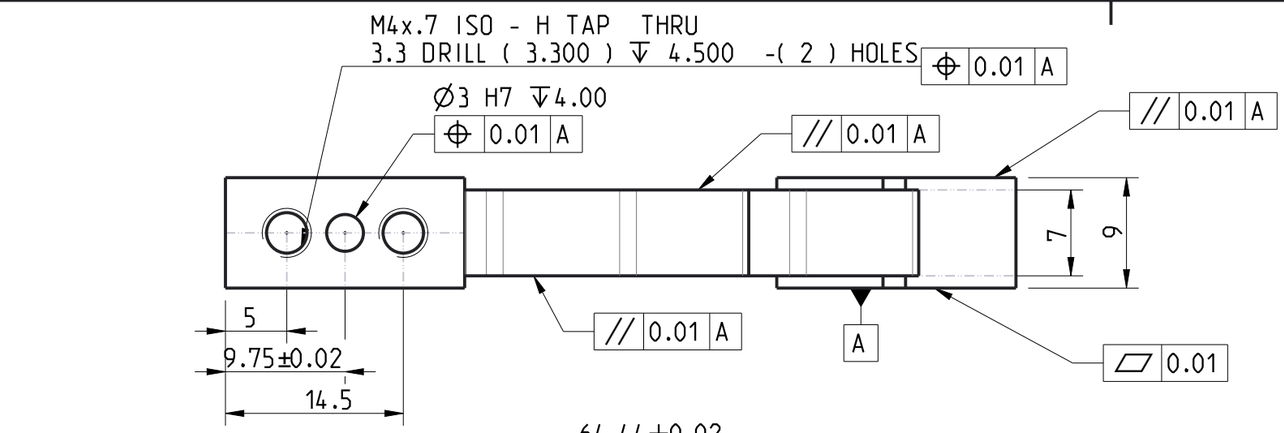

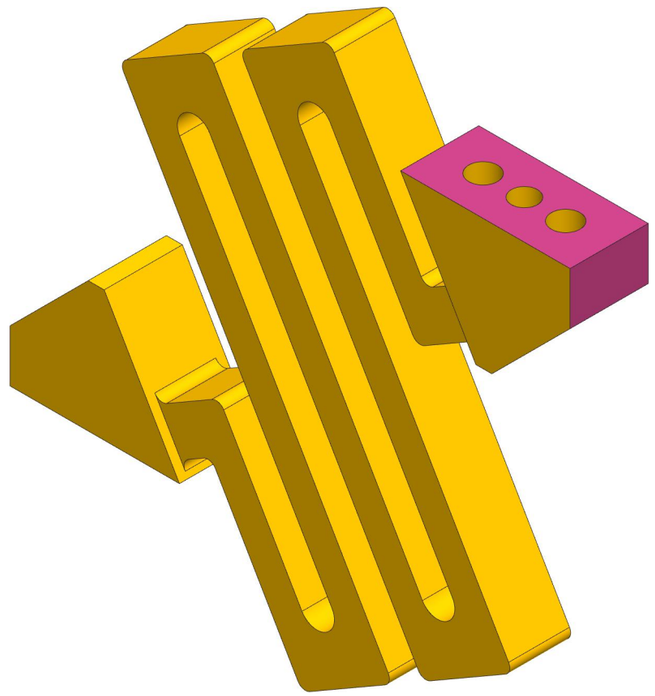

SCALE 2:1

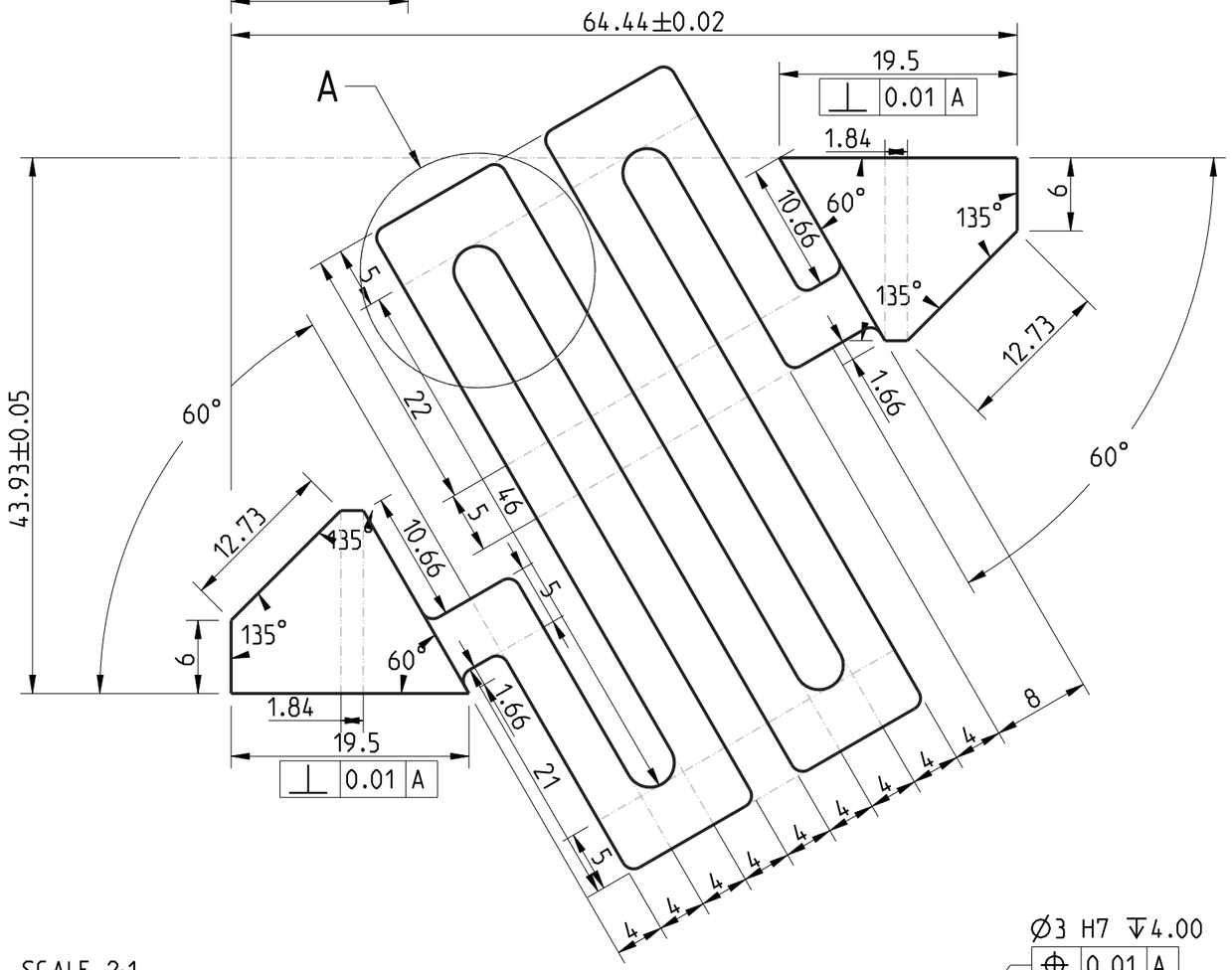

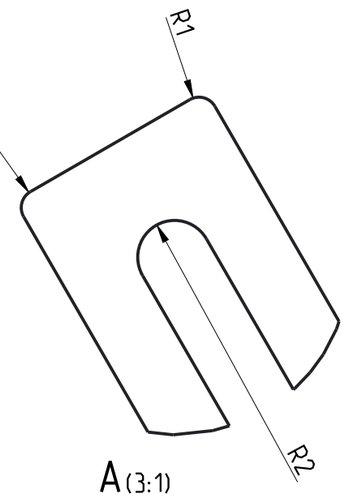

SCALE 2:1

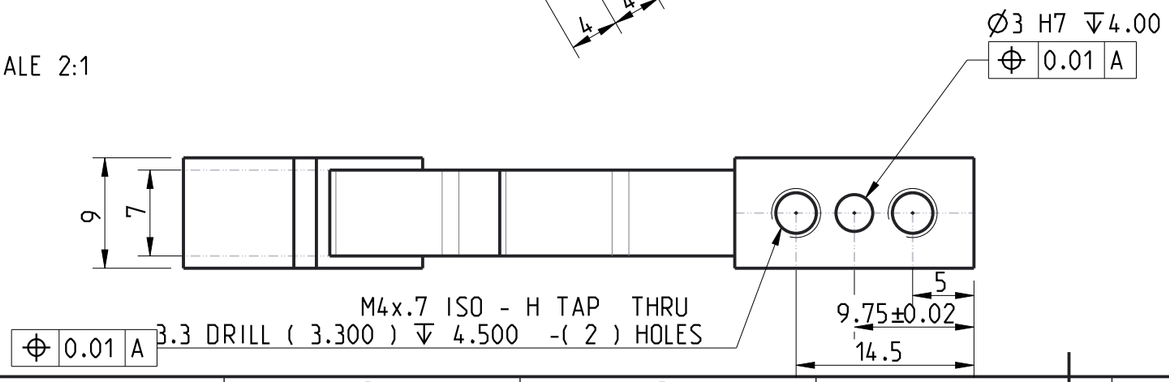

Material: ERGAL70			Undim. Rounds	Undim. Chamfers	
Treatment:			R=0.5	0.5 x 45°	
Tolerances according to UNI ISO 8015	General tolerances UNI EN 22768-1 / 22768-2		Metric threads ISO	Roughness	
	Dimensional Tolerance class - m Geometric Tolerance class - K		Nut screw 6H-screw 6g	1.6	
Issued	Drawn	Checked	Approved	Mass Kg	Size
IIT	G.PANE			0.029	A3
Description					
iit	Model Ref.	MG0019A0		Scale	Sheet
	Assembly Ref.			1:1	1/1
	Drawing code	MG0019A0		Date	
				11-Apr-25	