Connected Logistics - SAP IDG (India)

SAP Vehicles Integration with Maps and IOT

Sriram Rokkam
June 22, 2020

INTERNAL

THE BEST RUN SAP

Architecture Diagram

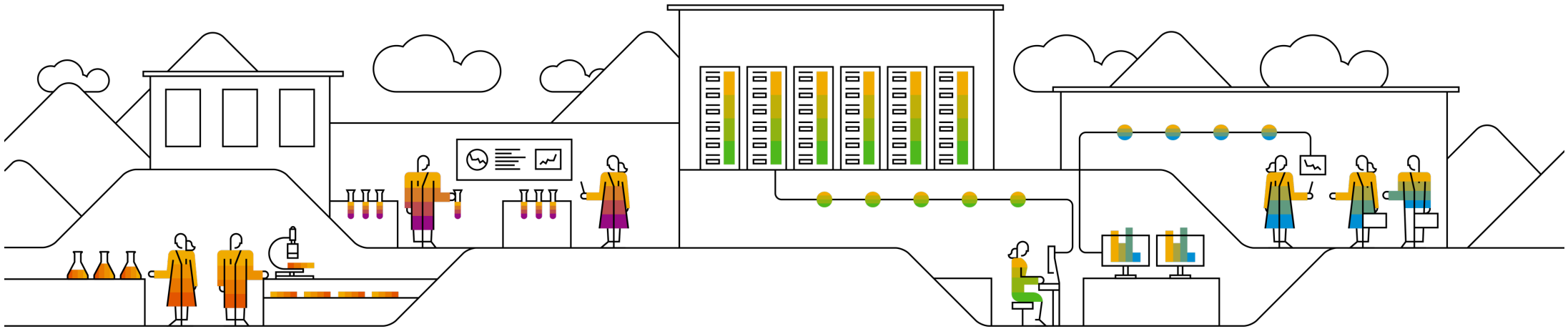

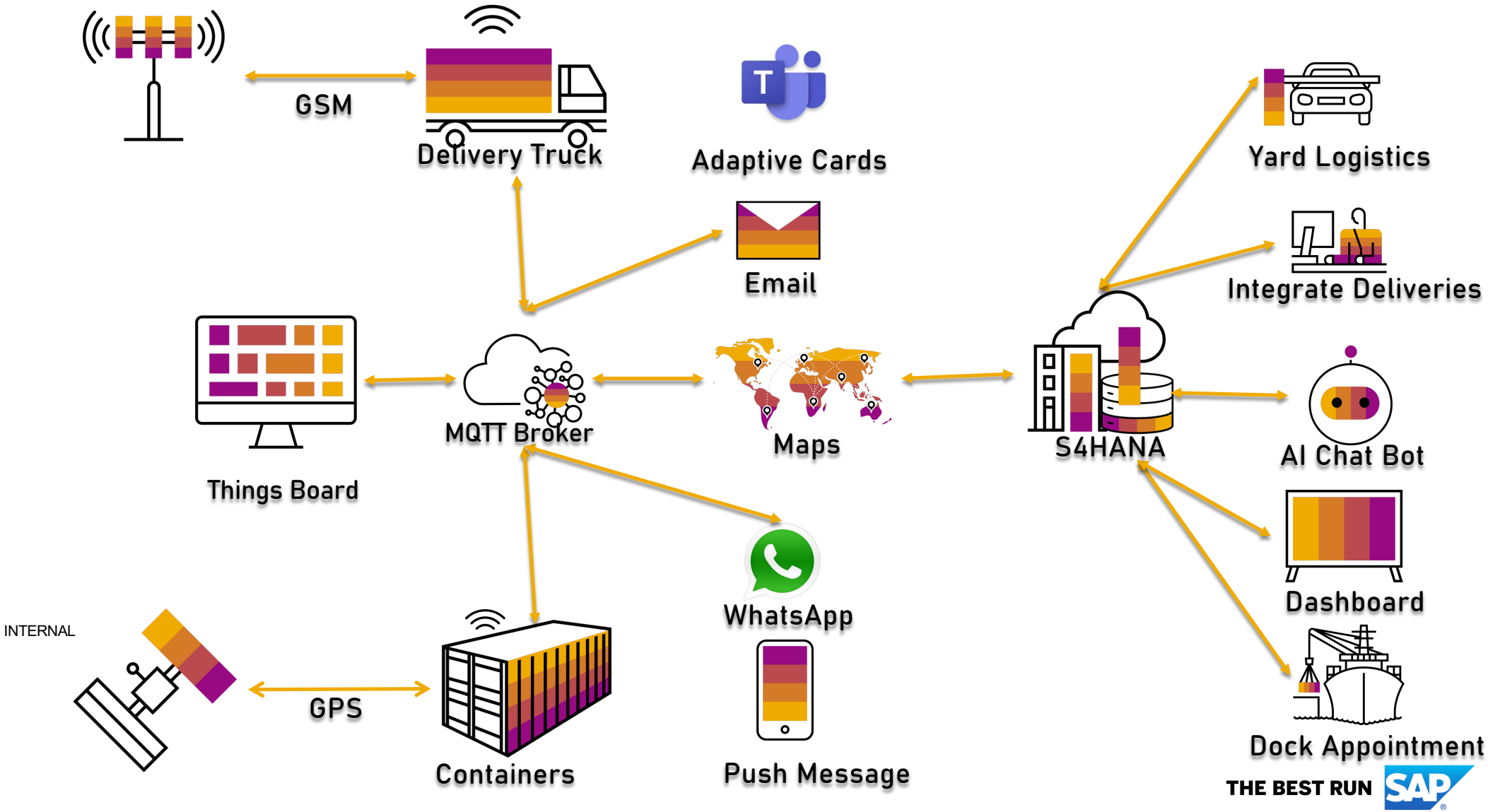
GSM
Delivery Truck
Adaptive Cards
Email
Yard Logistics
Integrate Deliveries
Things Board
MQTT Broker
Maps
S4HANA
AI Chat Bot
Dashboard
WhatsApp
INTERNAL
GPS
Containers
Push Message
Dock Appointment
THE BEST RUN
SAP

Design Principles

1. Tightly Integrated but Loosely Coupled Services

- Every Service is designed, in a away to work independently.
- Designed and Developed with dynamic object-oriented programming, so scalability will never be an issue.

2. Service Oriented Architecture

- Every functionality here has its own Service Class & static Method for ease of use for developers.
- These service classes are independent of SAP Modules.
- Services can be called from any other SAP / Non SAP Systems with RFC / Web Services.

3. Independent of Service Providers

- Design can integrate best of service providers in the public cloud.
- Tightly integrated with RESTful API's and Pub/Sub approaches, flexibility to chance service providers.
- Subscription based model to choose best of breed services with

Services	Service Providers	Supported Infrastructure
Public Maps	Google / Tom-Tom	Public Cloud
mqtt broker	AWS / Hive	Public / Private Cloud & On Premise.
Device Management	Things board / SAP Leonardo	Public / Private Cloud & On Premise
Alerts & Notifications	Azure / WhatsApp / Teams / Fiori	Cloud & On Premise

Design Principles - Cont.

4. Adaptability to both On-premises and Cloud versions

- The architecture will sustain for HEC / IaaS and for On Premises.
- The architecture will sustain for SAP Public & Private Cloud with SAP Cloud Platform Integration Service.

5. Multi Level Security

Services	Service Providers	Access Level Security	Transmission Level Security
Public Maps	Google / Tom-Tom	API Keys / Host Validation / Roles	CA Certificates(90 days renewal) HTTPS:// (Secured Transmission)
mqtt broker	AWS / Hive	Topic Subscription / Password / Rules	WSS: (Secured WebSocket)
Device Management	Things board / SAP Leonardo / SAP Lumira	Authorization / Password / Role based	TLS / Encrypted Transmission
Alerts & Notifications	Azure Mail / WhatsApp / Teams / SAP Fiori	Mobile & Mail OTP / SSO / Password.	REST API / Access Keys / Trust Certificates.

6. Multi Level Authorizations

- SAP Authorization Management.
- Roles and Profiles in SAP.

© 2020 SAP SE or an SAP affiliate company. All rights reserved. I INTERNAL

Service Catalogue

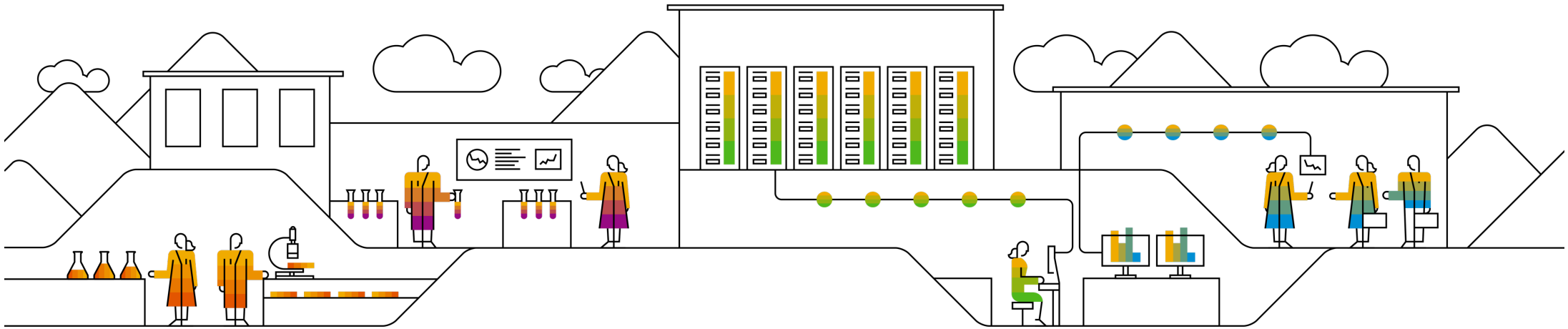

Service Catalog

Service 1 – Integrate Directions with Maps

- Display shortest possible in Google Maps to deliver all ship-to-parties.
- Mark all Ship-To-Parties in Google Maps.

Service 2 – Integrate IOT with Trucks.

- Display live Trucks positions in Google Maps using MQTT
- Update the Truck ETA to delivery in EWM Monitor.

Service 3 – IOT Device Management Dashboard

- Integrate Dashboard for Device Management.

Service 4 – Send Alerts to Business Partners

- Send Email to all Ship-To-Party with map link.
- Send WhatsApp / SMS with Maps link.

© 2020 SAP SE or an SAP affiliate company. All rights reserved. I INTERNAL

Service Catalog-Cont.

Service 5 – Alert with Geofencing

- Generate an Alert Email with ETA with in a radius.

Service 6 – Integrate with Dock Appointment Schedule.

- Integrate with Door and Block Appointment with geofencing Alert.
- Block the time with DAS with ETA & Unloading time.

Service 7 – Fiori Dashboard Development

- Develop Fiori Dashboard with all the inbound and outbound trucks.
- Desktop / Mobile and Tablet Functionality.

Service 8 – Extend the service to Cloud Warehouse

- Connect Maps and IOT functionality with SAP Cloud Warehousing.

© 2020 SAP SE or an SAP affiliate company. All rights reserved. I INTERNAL

Service 1
SAP Vehicles with Maps

INTERNAL

Partner logo

THE BEST RUN SAP

Service 1- SAP Vehicles with Maps

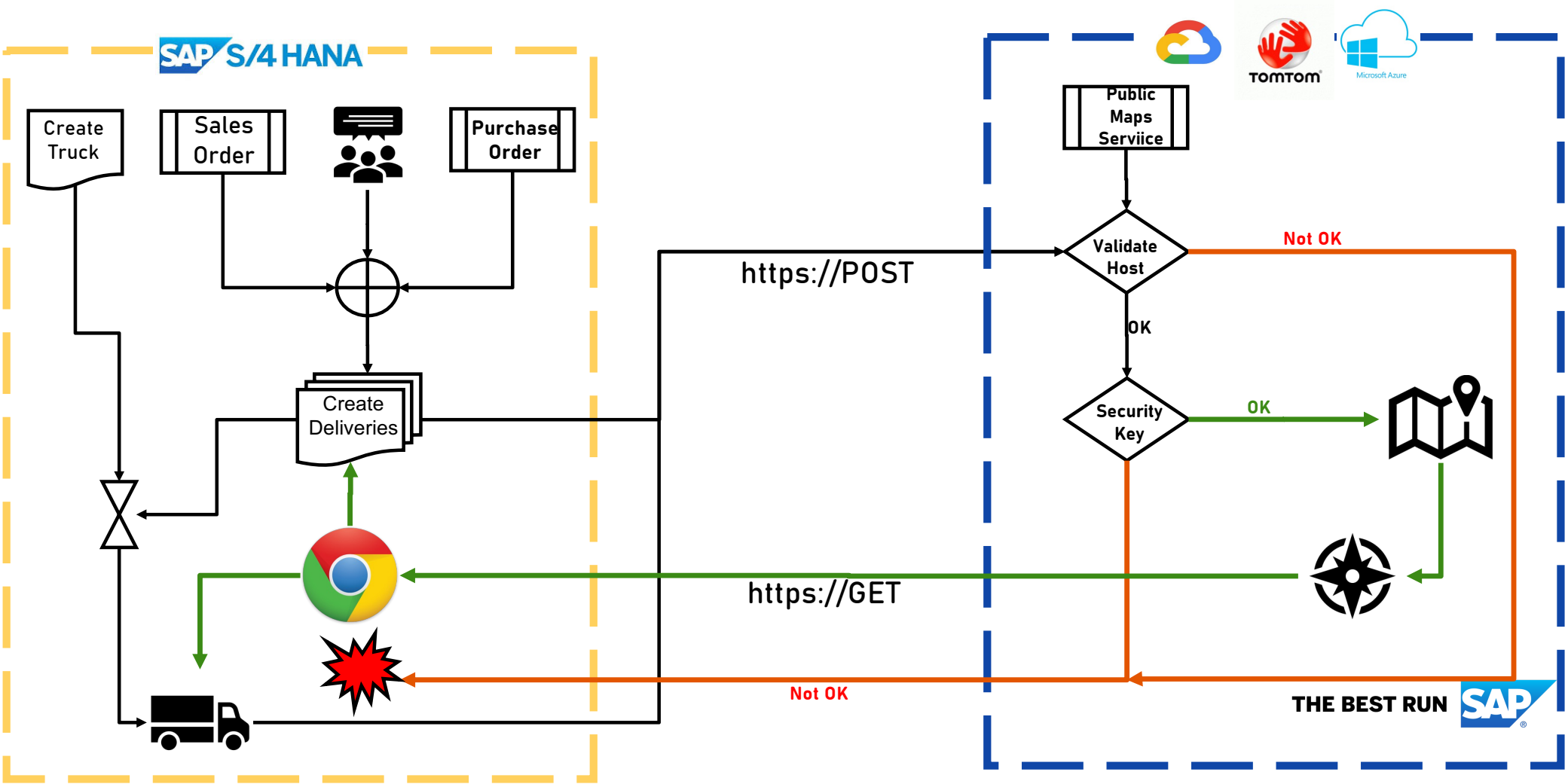

Service 2
SAP Vehicles with IOT

INTERNAL

Partner logo

THE BEST RUN SAP

Service 2- SAP Vehicles with IOT

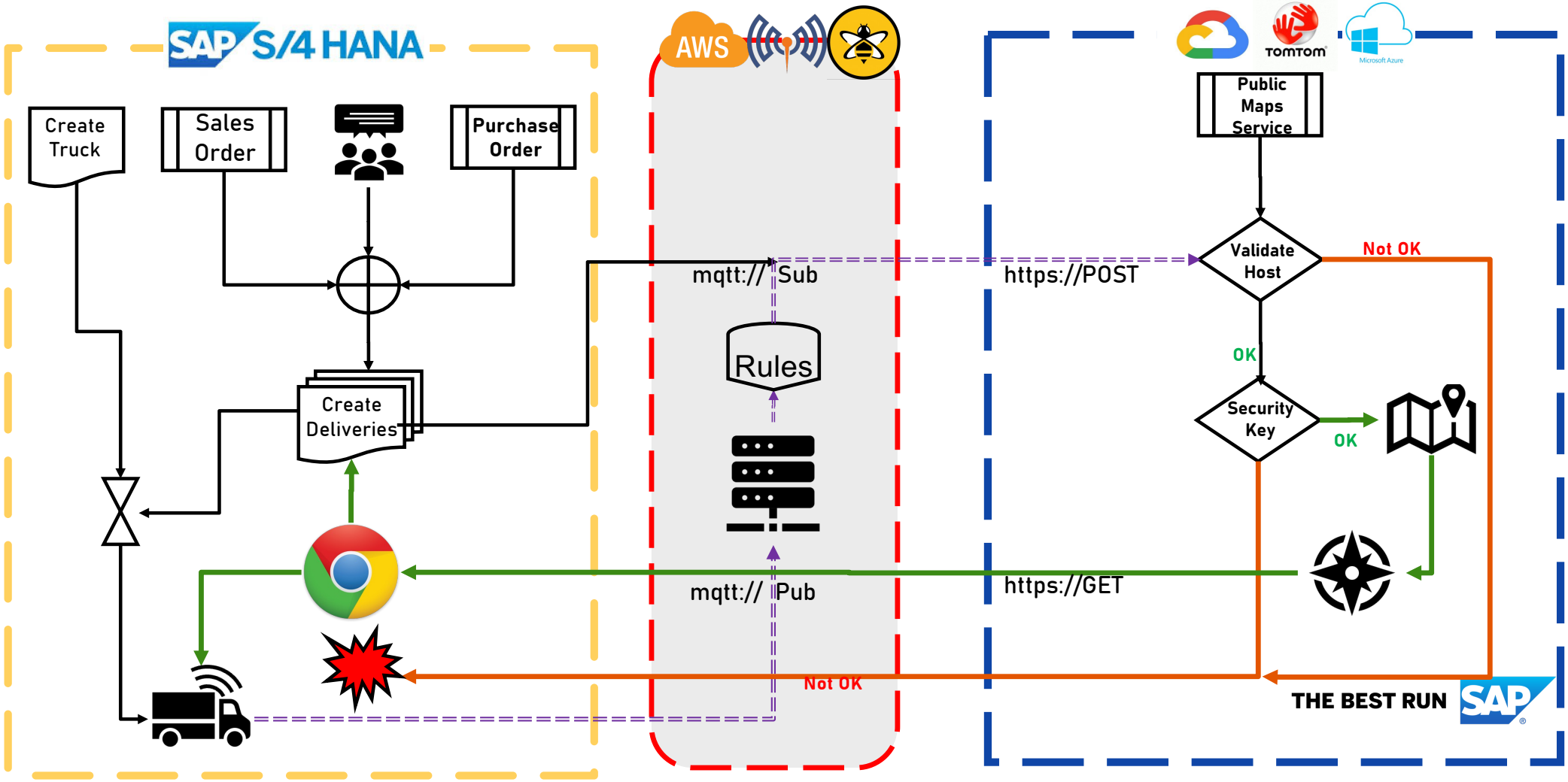

Thank you.

Contact information:

F name L name
Title
Address
Phone number

Partner logo

THE BEST RUN SAP