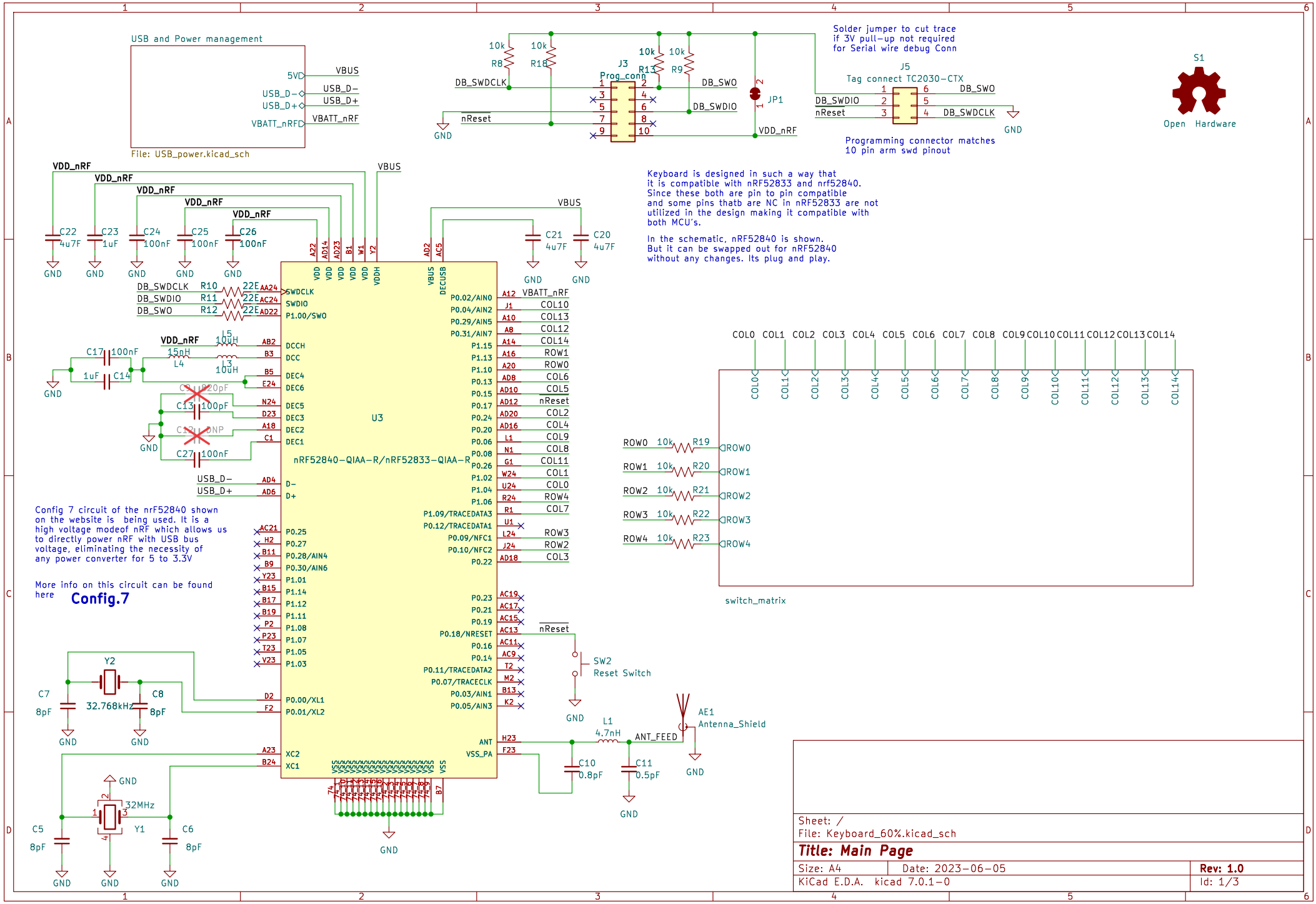
USB and Power management
5V
VBUS
USB_D−
USB_D+
VBATT_nRF
File: USB_power.kicad_sch
J3
Prog_conn
DB_SWDCLK
DB_SWO
DB_SWDIO
nReset
VDD_nRF
JP1
Solder jumper to cut trace if 3V pull−up not required for Serial wire debug Conn
J5
Tag connect TC2030−CTX
Programming connector matches 10 pin arm swd pinout
S1
Open Hardware
Keyboard is designed in such a way that it is compatible with nRF52833 and nrf52840. Since these both are pin to pin compatible and some pins thatb are NC in nRF52833 are not utilized in the design making it compatible with both MCU's.
In the schematic, nRF52840 is shown. But it can be swapped out for nRF52840 without any changes. Its plug and play.
U3
nRF52840−QIAA−R/nRF52833−QIAA−R
switch_matrix
SW2
Reset Switch
AE1
Antenna_Shield
ANT_FEED
Y2
32.768kHz
Y1
32MHz
Config 7 circuit of the nrF52840 shown on the website is being used. It is a high voltage modeof nRF which allows us to directly power nRF with USB bus voltage, eliminating the necessity of any power converter for 5 to 3.3V
More info on this circuit can be found here
Config.7
Sheet: /
File: Keyboard_60%.kicad_sch
Title: Main Page
Size: A4
Date: 2023−06−05
Rev: 1.0
KiCad E.D.A. kicad 7.0.1−0
Id: 1/3

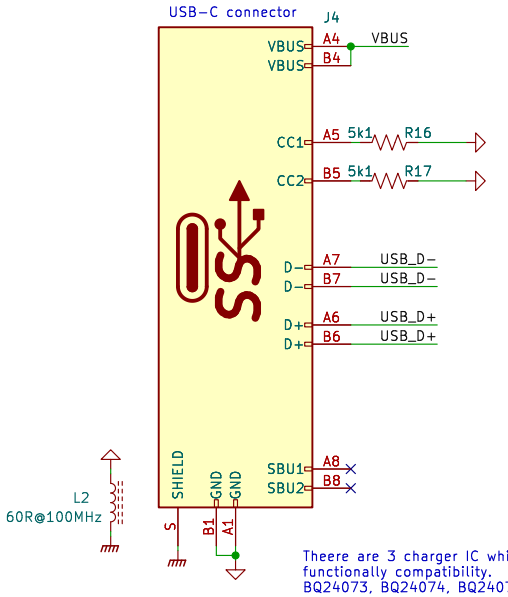

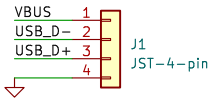

This keyboard has a onboard USB-c Connector and also has support for universal daughterboard USB connectors. learn more about universal daughterboard HERE

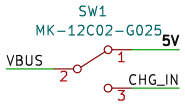

A SPDT switch is used to select power source.
Switch position 1 – Direct power from USB connector.
Switch position 2 – Power from battery and USB connector.

If anybody wants to use keyboard without battery and cahrger module can do so by putting the switch in position 1.

If anyone wants to use keyboard with only usb power, The whole BQ24074 section can be made DNP and SW1 can be slided to POS 1 to operate only with USB without Battery.

If battery is connected, then put it to position 2.

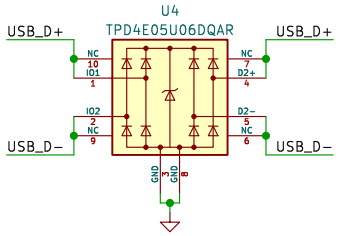

USB bus protection TVS diode

Theere are 3 charger IC which are functionally compatibility. BQ24073, BQ24074, BQ24075. Any one of thrm can be used. They are all pin to pin compatible and the design is done in such a way that you can swap out one for another on same PCB and have same functionality.

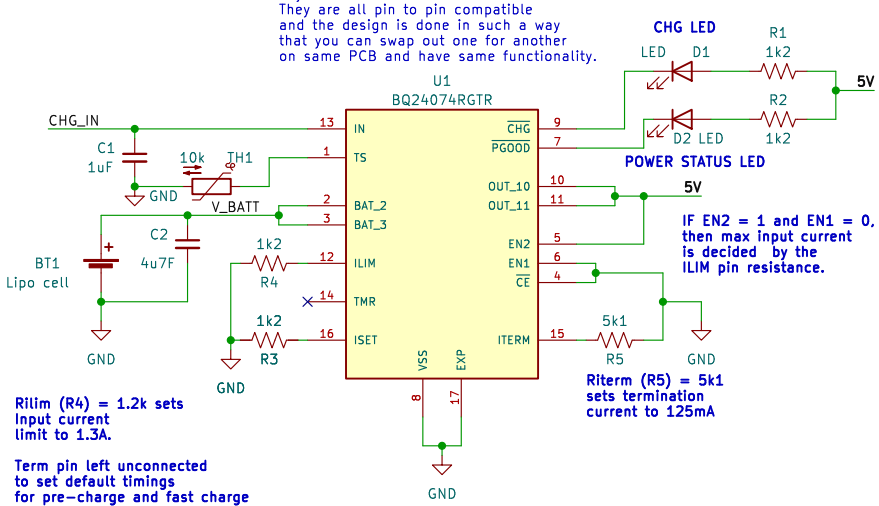

IF EN2 = 1 and EN1 = 0, then max input current is decided by the ILIM pin resistance.

Riterm (R5) = 5k1 sets termination current to 125mA

Rilim (R4) = 1.2k sets input current limit to 1.3A.

Term pin left unconnected to set default timings for pre-charge and fast charge timings.

Riset (R3) = 1.2k sets batt fast charge current limit to 740mA.

Voltage divider to measure battery voltage.

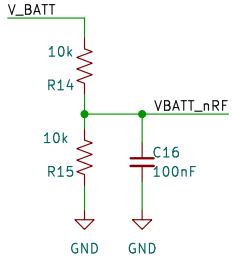

ZMK (Zephyr mechanical keyboard) supports Battery SOC reporting over BLE using battery voltage as it has a OCV (open circuit voltage) vs SOC (state of charge) LUT (look up table).

Power Connections

5V ▷ 5V

USB Connections

USB_D- ◇ USB_D-

USB_D+ ◇ USB_D+

VBATT_nRF ▷ VBATT_nRF

Sheet: /USB and Power management/
File: USB_power.kicad_sch

Title: USB and Power Path

Size: A4	Date: 2023-06-05	**Rev: 1.0**
KiCad E.D.A. kicad 7.0.1-0		Id: 2/3

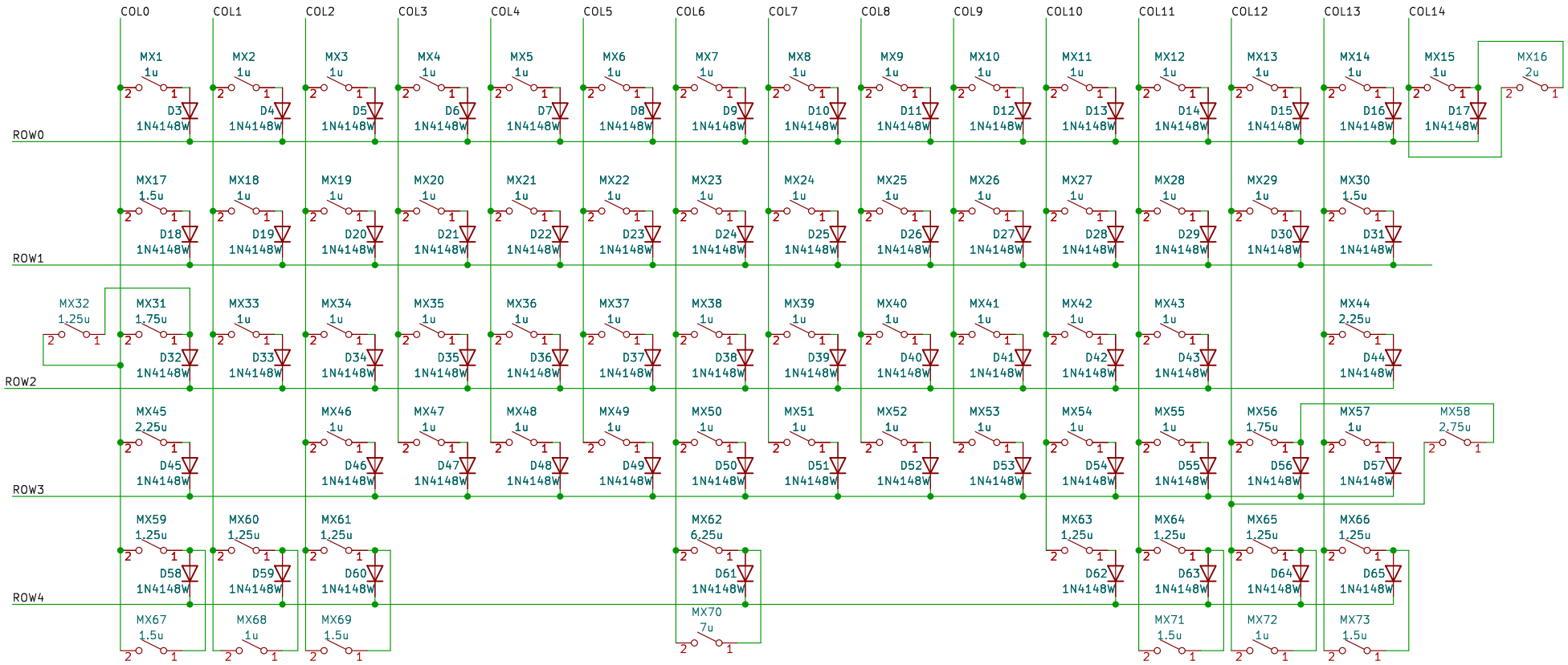

ROW0 ▷ ROW0	COL0 ◁ COL0	COL5 ◁ COL5	COL10 ◁ COL10
ROW1 ▷ ROW1	COL1 ◁ COL1	COL6 ◁ COL6	COL11 ◁ COL11
ROW2 ▷ ROW2	COL2 ◁ COL2	COL7 ◁ COL7	COL12 ◁ COL12
ROW3 ▷ ROW3	COL3 ◁ COL3	COL8 ◁ COL8	COL13 ◁ COL13
ROW4 ▷ ROW4	COL4 ◁ COL4	COL9 ◁ COL9	COL14 ◁ COL14

Sheet: /switch_matrix/
File: switch_matrix.kicad_sch

Title:

Size: A4	Date:	**Rev:**
KiCad E.D.A. kicad 7.0.1-0		Id: 3/3