NAME: Suryaansh Jain

ROLL NO: cs21btech11057

EXPERIMENT 1

Aim:

To determine the Young's modulus of a wooden scale using a strain gauge.

Apparatus Required:

A half meter scale with two identical strain gauges fixed to one end of the scale, One strain gauge at the top and the other at the bottom-length wise, a Clamp, a Circuit board with appropriate terminals to constitute a Wheatstone bridge network, Hanger and Slotted weights (m = 50 gram), Digital Multi-meter, Vernier Calipers, Screw gauge, Decade Resistance Box (D.R.B), Constant current source and connecting wires

Theory:

Young's Modulus (Y):

When an external force (F) is applied along a bar of length (L) (and perpendicular to the cross sectional area (A), internal forces in the bar resist distortion and the bar attains an equilibrium when the external force is exactly balanced by the internal forces with a change in length (ΔL). The tensile stress is force per unit area (in Nm^{-2}) and the longitudinal strain is the change in length to the original length and it is a dimensionless quantity. The ratio of the tensile stress (F/A) to the tensile strain ($\Delta L/L$) is given by,

$$Y = \frac{F/A}{\Delta L/L}$$

Strain Gauge:

A strain gauge is a transducer whose electrical resistance varies in proportion to the amount of strain in device. The most widely used gauge is metallic strain gauge which consists of a very fine wire or, more commonly metallic foil arranged in a grid pattern. The grid pattern maximizes the amount of metallic wire of foil subject to strain in the parallel direction as shown in the below figure, the cross sectional area of the grid is minimized to reduce the effect of shear strain and Poisson strain. The grid is bonded to a thin backing, called the carrier. The strain gauge is attached directly to the test specimen and responds with a linear change in electrical resistance.

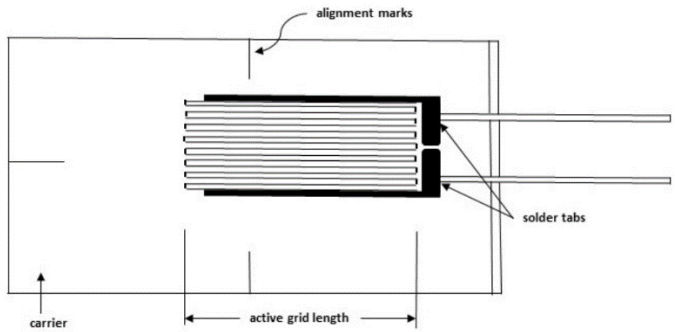

Fig 1: Strain Gauge

A fundamental parameter of the strain gauge is its sensitivity to strain, expressed quantitatively as the gauge factor (λ). Gauge factor is defined as the ratio of fractional change in electrical resistance to the fractional change in length.

$$\lambda = \frac{\Delta R/R}{\Delta L/L}$$

The gauge factor for metallic strain gauge is typically around 2.

<u>Wheatstone Bridge:</u>

Measuring the strain with strain gauge requires accurate measurement of very small changes in resistance and such small changes in R can be measured with a Wheatstone bridge. A general Wheat stone bridge consists of four resistive arms with an excitation voltage, V_{ex} that is applied across the bridge as shown in Figure 1.2. The output voltage of the bridge V_o, will be equal to

$$V_o = \left(\frac{R_3}{R_3 + R_4} - \frac{R_2}{R_2 + R_1}\right) \times V_{ex}$$

From this equation, it is apparent that when $R_1/R_2 = R_4/R_3$, when the voltage output V0 will be zero. Under these conditions, the bridge is said to be balanced. Any change in resistance in any arm of the bridge will result in a non-zero output voltage. Therefore, if we replace R_4 as shown in the below figure with an active strain gauge, any change in the strain gauge resistance will unbalance the bridge and produce a nonzero output voltage. If the nominal resistance of the strain gauge is designated as R_G, then the strain –induced change in resistance, ΔR can be expressed as,

$$\Delta R = R_G \cdot \lambda \cdot (Strain) = R_G \cdot \lambda \cdot \frac{\Delta L}{L}$$

If $R_1 = R_2$ and $R_3 = R_G$, the bridge equation above can be rewritten to express V_o/V_{ex} as a function of strain. Ideally, we would like the resistance of the strain gauge to change only in response to applied strain. However, strain gauge material, as well as the specimen material on which the gauge is mounted, will also respond to changes in temperature. Strain gauge manufactures attempt to minimize sensitivity, to temperature by processing the gauge material to compensate for the thermal expansion of the specimen material for which the gauge is intended. While compensated gauges reduce the thermal

sensitivity, they do not totally remove it. By using two strain gauges in the bridge, the effect of temperature can be further minimized. For example, in a strain gauge configuration where one gauge is active ($R_G + \Delta R$), and a second gauge is placed transverse to the applied strain. Therefore, a strain has little effect on the second gauge, called the dummy gauge. However, any changes in temperature will affect both gauges in the same way because the temperature changes are identical in the two gauges, the ratio of their resistance does not change, and the effects of the temperature change are minimized. The sensitivity of the bridge to strain can be doubled by making both gauges active in a half bridge configuration. The below figure illustrates a bending beam application with one bridge mounted in tension ($R_G + \Delta R$) and the other mounted in compression ($R_G - \Delta R$). This bridge configuration, whose circuit diagram is also illustrated in the next figure, yields an output voltage that is linear and approximately doubles the output of the bridge circuit.

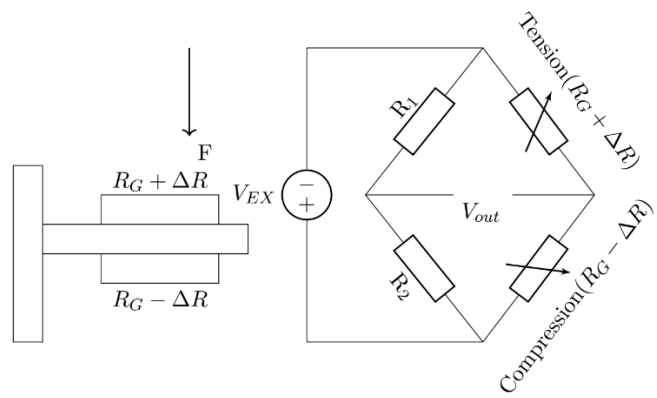

Fig 2: Wheatstone Network & Gauge Placement

In this experiment, we aim to determine the Young's modulus of a half-meter wooden bar by loading it with a mass of m. For a beam of rectangular cross-section with breadth (b) and thickness (d), then the second moment of inertia I_{beam}, is

$$I_{beam} = \frac{bd^3}{12}$$

The moment of force (M) or restoring couple is

$$M = \frac{I_{beam} \cdot Y}{r}$$

Where, Y is the Young's modulus of the wooden beam, r is the radius of curvature of the bending beam I_{beam} is the moment of inertia of the beam. Young's modulus Y is calculated by assuming that at the equilibrium, the bending moment is equal to the restoring moment.

Procedure:

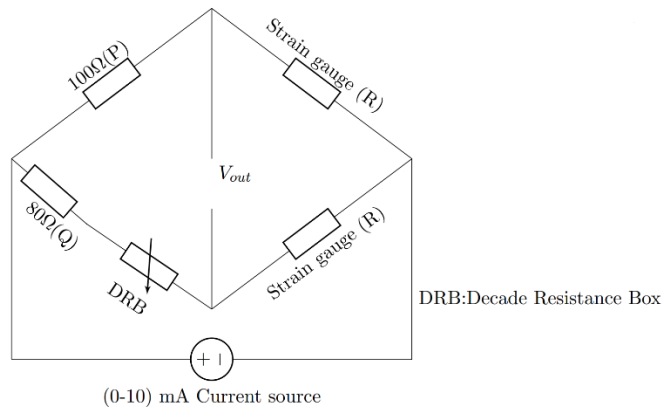

Fig 3: Circuit Diagram

1.Clamp the beam to the table in such a way that the strain gauges are close to the clamped end. Load and unload the free end of the beam several times.

2. Make the connections of the circuit diagram as shown in Fig 1.

3. Switch on the constant current source and the digital multimeter.

4. Balance the bridge using Decade Resistance Box (DRB). At this stage the digital multimeter may read 0 or very nearly zero. Note: This should be done without any load.

5. At this stage, the system is ready to perform the experiment. Suspend the load with the help of slotted weights with hanger. It is a good idea to keep the load as close as possible to the free end. Note down the voltage with the help of digital multimeter.

6. Increase the load in steps of mass ($m = 50\ grams$), up to $5m$ grams and take the readings each time.

7. Unload the beam from $5m$ grams down to zero in steps of m grams, note the corresponding digital multimeter readings.

8. To check reproducibility, repeat all the above processes, take readings while loading and unloading in steps of m grams.

9. Plot a graph between mass along X-axis and unbalanced voltage dV along Y-axis; obtain the slope of this graph (dV/m).

10. Note the distance between the centre of the strain gauges and the point of application of the load (L).

11. Measure the breadth (b) of the beam using slide callipers.

12. Measure the thickness (d) of the beam using a screw gauge.

13. Calculate the Young's modulus (which is nothing but the tensile stress to tensile strain ratio) of the given material with the following expression. (Using above equations).

$$Y = \frac{6Lg\lambda RI}{bd^2(1+\frac{R}{P})(\frac{dV}{m})}$$

Where,

g is acceleration due to gravity

λ is the gauge factor

I is the output current from the source (S)

R is the resistance of the strain gauge

P is the resistance of the gauge circuit

Note

1. The breadth of the beam can be measured by using Vernier calipers. Total reading can be found as $TR = MSR + (VR \times LC)$.
2. The thickness of the beam can be measured using screw gauge. Total reading can be found as $TR = PSR + (HSR \pm ZE) \times LC$.

Where

TR is total reading

MSR is main scale reading

VR is Vernier reading

PSR is linear scale reading

HSR is height scale reading

ZE is zero error

LC is least count

Tabulations:

1. Output current from the source (I) = 10 mA
2. Resistance of the strain gauge (R)= 120.2 Ω
3. Length of the wooden scale (L) = 41.5 cm
4. Thickness of the wooden scale (d) =6.42 mm
5. Resistance value in bridge (P) = 100 Ω
6. Gauge factor (λ) = 2
7. Breadth of the beam using slide calipers (b) = 2.565 cm

Load (g) →	$\mathbf{0}$	$\boldsymbol{m}$	$\mathbf{2}\boldsymbol{m}$	$\mathbf{3}\boldsymbol{m}$	$\mathbf{4}\boldsymbol{m}$	$\mathbf{5}\boldsymbol{m}$

DMM Reading $(mV)\downarrow$						
Loading (V_1)	0	0.15	0.29	0.44	0.61	0.78
Unloading (V_2)	0	0.18	0.33	0.46	0.61	0.78
Mean $(\frac{V_1+V_2}{2})$	0	0.165	0.31	0.45	0.61	0.78

Graph:

We can find the best fitting line $y = sx + c$ for the graph of $V\ (in\ mV)$ vs $m\ (in\ grams)$ as follows:

$$Slope\ (s) = \frac{dV}{m} = \frac{n(\sum_i x_i y_i) - (\sum_i x_i)(\sum_i y_i)}{n(\sum_i x_i^2) - (\sum_i x_i)^2} = 0.0031\ mV\ g^{-1} = \boxed{0.0031\ V\ kg^{-1}}$$

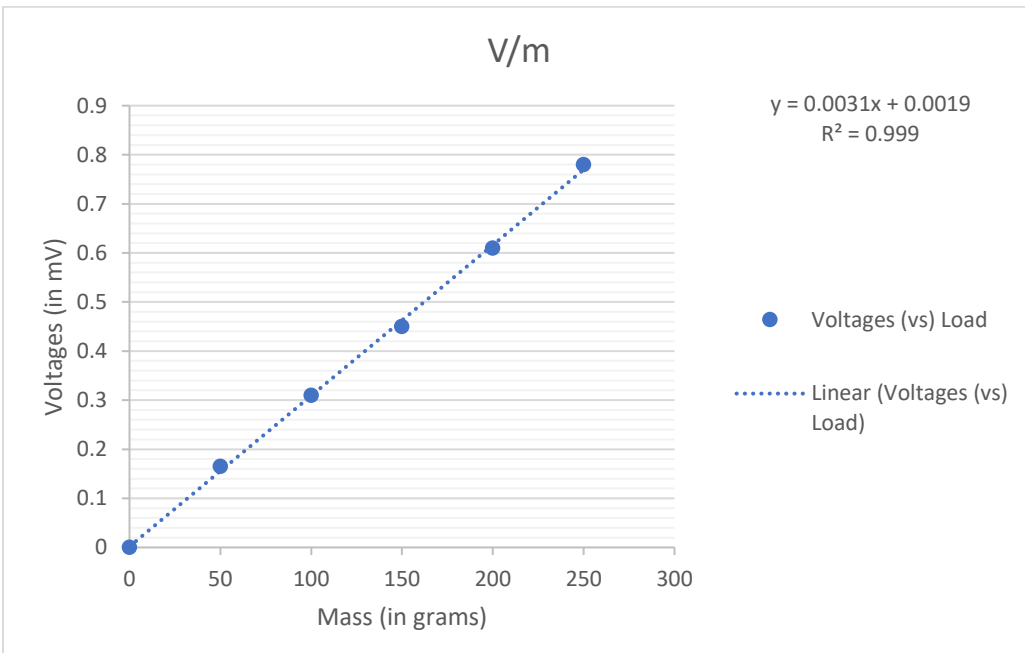

Calculations:

Plugging in known values into below equation,

$$Y = \frac{6Lg\lambda RI}{bd^2(1 + \frac{R}{P})(\frac{dV}{m})}$$

we have

$$Y = \frac{6(41.5 \times 10^{-2}\ m)(9.81\ ms^{-2})(2)(120.2\ \Omega)(10 \times 10^{-3}\mathrm{A})}{(2.565 \times 10^{-2}\ m)(6.42 \times 10^{-3}\mathrm{m})^2(1 + \frac{120.2\ \Omega}{100\ \Omega})(0.0031\ V\ kg^{-1})} = \boxed{8.137 \times 10^9 Nm^{-2}}$$

Error Analysis:

Differentiating the below equation gives us:

$$Y = \frac{6Lg\lambda RI}{bd^2(1+\frac{R}{P})(\frac{dV}{m})}$$

$$\Rightarrow \frac{\Delta Y}{Y} = \frac{\Delta L}{L} + \frac{\Delta g}{g} + \frac{\Delta \lambda}{\lambda} + \frac{\Delta R}{R} + \frac{\Delta I}{I} + \frac{\Delta b}{b} + 2 \cdot \frac{\Delta d}{d} + \frac{\Delta\left(1+\frac{R}{P}\right)}{\left(1+\frac{R}{P}\right)} + \frac{\Delta \frac{dV}{m}}{\frac{dV}{m}}$$

$$\Rightarrow \frac{\Delta Y}{Y} = \frac{\Delta L}{L} + \frac{\Delta g}{g} + \frac{\Delta \lambda}{\lambda} + \frac{\Delta R}{R} + \frac{\Delta I}{I} + \frac{\Delta b}{b} + 2 \cdot \frac{\Delta d}{d} + \frac{\Delta\left(\frac{R}{P}\right)}{\left(1+\frac{R}{P}\right)} + \frac{\Delta \frac{dV}{m}}{\frac{dV}{m}}$$

$$\Rightarrow \frac{\Delta Y}{Y} = \boxed{\frac{\Delta L}{L} + \frac{\Delta g}{g} + \frac{\Delta \lambda}{\lambda} + \frac{\Delta R}{R} + \frac{\Delta I}{I} + \frac{\Delta b}{b} + 2 \cdot \frac{\Delta d}{d} + \frac{\left(\frac{R}{P}\right)(\frac{\Delta R}{R} + \frac{\Delta P}{P})}{\left(1+\frac{R}{P}\right)} + \frac{\Delta \frac{dV}{m}}{\frac{dV}{m}}}$$

Note that the error in slope s of the graph of V vs m can be given by:

$$s = \frac{V_2 - V_1}{m_2 - m_1} \Rightarrow \frac{\Delta \mathrm{s}}{\mathrm{s}} = \frac{\Delta(V_2 - V_1)}{V_2 - V_1} + \frac{\Delta(m_2 - m_1)}{m_2 - m_1}$$

$$\Rightarrow \frac{\Delta \mathrm{s}}{\mathrm{s}} = \frac{\Delta(V_2) + \Delta(V_1)}{V_2 - V_1} + \frac{\Delta(m_2) + \Delta(m_1)}{m_2 - m_1}$$

$$\Rightarrow \frac{\Delta \mathrm{s}}{\mathrm{s}} = \frac{2\Delta V}{V_2 - V_1} + \frac{2\Delta \mathrm{m}}{m_2 - m_1}$$

Only considering error in L, b and d, we have:

$$\frac{\Delta Y}{Y} = \frac{\Delta L}{L} + \frac{\Delta b}{b} + 2 \cdot \frac{\Delta d}{d} = \frac{0.1}{41.5} + \frac{0.001}{2.565} + 2 \cdot \frac{0.01}{6.42} = \boxed{0.5915\%}$$

Result:

Young's modulus has been found to be $8.137 \times 10^9 Nm^{-2}$.

Precautions:

1. Avoid parallax error while measuring breadth and height.
2. Strain gauge should not be affected when clamped.